1

INFO

INFO

Version 1.0

Inquiry specification for control valves

In case of pump protection the SR/SA-type is highly associated with modern process control and monitoring systems, as the minimum flow can be precisely adjusted to customers resp. plant requirements.

Please transmit the following data for a particular valve design to:
Schroeder Valves GmbH & Co. KG
Fax +49 (0) 2263-70121
info@schroeder-valves.com

Company: _____ Project: _____
Name: _____ Quantity: _____
Phone: _____ Inquiry-No.: _____
Fax: _____ Date: _____

1. Type of power ☐ SR ☐ SA Preferred company and type:
   - 1.1 ☐ electric _____
   - 1.2 ☐ pneumatic _____
   - 1.3 ☐ hydraulic _____
   - 1.4 ☐ medium conrolled (only SA)
2. Accessories _____
3. Technical Data
   - Pressure rate p_D _____ [bar]
   - Temperature T_D _____ [°C]
   - Medium _____
   - Density _____ [kg/m³]
4. Preferred type
   - ☐ angle type
   - ☐ z-type
   - ☐ straight through
5. Process data

Loading condition		I	II	III	IV	
Flow rate	Q					[m³/h]
Inlet pressure	p_i					[bar]
Outlet pressure	p_o					[bar]
Differential pressure	Δp_{max}					[bar]
Inlet temperature	T_i					[°C]

6. Pipe connection
   - Flange _____ DN Inlet _____
   - Welding end _____ DN Outlet _____
   - Others _____ Material _____

Others / Comments / Specifications / Documentations, etc.:

_____

_____

_____

Inquiry Specification for Compensating Bypass Check Valves

The Compensating Bypass Check Valve is a pump protection device. It automatically protects centrifugal pumps from damage which might occur through partial evaporation of the pump contents during low load operation. Every Compensating Bypass Check Valve is designed particularly for the necessary pumps and plant data. Please transmit the following data for a particular valve design to:

Schroeder Valves GmbH & Co. KG
Fax +49 (0) 2263-70121
info@schroeder-valves.com

Company: _____ Project: _____
Name: _____ Quantity: _____
Phone: _____ Inquiry-No.: _____
Fax: _____ Date: _____

1. Non return valve in the bypass branch * ☐ no ☐ yes
2. Installation * ☐ vertical ☐ horizontal
3. Variable Pump Speed * ☐ no ☐ yes
4. Medium *
5. Density * [kg/m³]
6. Operating Temperature * [°C] [°F]
7. Standards * ☐ DIN ☐ ANSI ☐ Other
8. Max. Capacity Q_{max} [m³/h]
9. Design Capacity $Q_{100\%}$ * [m³/h]
10. Total Head at $Q_{100\%}$ * [m]
11. Bypass Flow Q_{By} * [m³/h]
12. Total Head at Q_{By} * [m]
13. Pump inlet pressure * [bar]
14. Back pressure on bypass branch [bar]
15. Valve pressure rating
16. Valve Flange size / rating inlet outlet bypass
17. Valve Flange sealing
18. Additional branch ☐ yes, function
19. Pump curve attached ☐ no ☐ yes

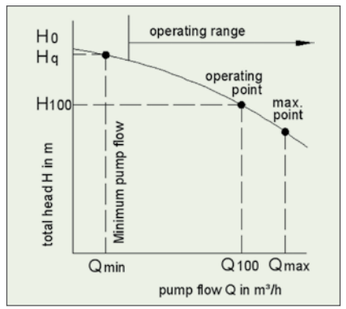

Remarks / Specifications / Documentation / Inspections etc.:

_____

_____

_____

*** requested design data**

Comparison of economy

The Compensating Bypass Check Valves do not only protect pumps from damages. Compared with a constant bypass flow it improves the economy of the plant. Example:

Process data	
fluid, temperature	water, 134 °C
density in operat. temp.	0.93 kg/dm³
operating flow $Q_{100\%}$	63 m³/h
head in $Q_{100\%}$	288 m

Economy data	
operating time p.a.	330 days per 24h
cost of energy	0.05 € / kWh

Design data				
pump data	flow	total head	efficiency factor	NPSHR
① minimum flow Q_{By}	12 m³/h	325 m	0.38	1.7 m
② operating flow $Q_{100\%}$	63 m³/h	288 m	0.73	2.4 m
minimum + operating flow $Q_{By} + Q_{100\%}$	75 m³/h	288 m	0.76	3.1 m

Required pump power and energy consumption			
	const. bypass flow	with Schroeder bypass check valve	possible cost saving
pump power at minimum flow P_{QBy}	26 kW ①	26 kW ①	–
energy costs (p.a.) at minimum flow Q_{By}	10,300,- € ①	10,300,- € ①	–
pump power at operating flow $P_{Q100\%}$	72 kW ③	63 kW ②	**9 kW**
energy costs (p.a.) at operating flow $Q_{100\%}$	28,500,- € ③	24,900,- € ②	**3,600,- €**
	Valve SSV 10 50/40-50/50/25/0-1 price for this application		**appr. 1,900,- €**

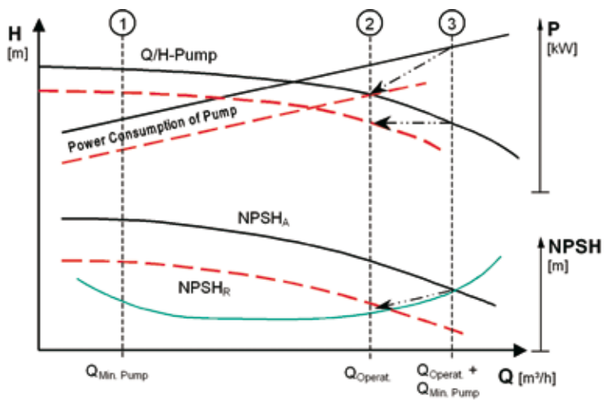

INFO

Standards and Certifications

Our Special-Compensating Bypass Check Valves and our Multiport Throttles are designed according to the AD 2000 Standard (e.g. in calculation and choice of material).

The construction is according to specification AD 2000 and particularly to EN 13445. As per Pressure Equipment Directive 97/23 EG the products are provided with the CE marking and the Declaration of Conformity. Certified according to the Module H1 (Pressure Equipment Directive 97/23 EG) all dangerous material classes of category 1 to 4 are covered.

All pressure holding parts of our products are built from materials with a 3.1-certificate.

For all products you can get acc. to standard EN 10204
- a Certificate of compliance with the order 2.1,
- a Test report 2.2 or
- an Inspection certificate 3.1

Our company is certificated according to DIN 9001 since 1995 and according to the new DIN EN ISO 9001:2000 since 2003.

SSV 10-12

Special Compensating Bypass
Check Valve

look at info
overview

PN 10-PN 400
ANSI 150-2500

up to
Δp 250 bar

SSV

SSV 10-12
(type with integrated throttles in the bypass)

Range of Applications

The Compensating Bypass Check Valve type SSV 10-12 is a pump protection device. It automatically protects centrifugal pumps – especially those handling hot water – from damage which might occur through partial evaporation of the water content during low load operation.
As soon as the pump capacity drops below a predetermined flow rate, the bypass valve opens sufficiently to maintain the pump minimum flow rate. This rate is maintained even if the flow through the main valve to the boiler or process is completely shut off. The pressure will be reduced by integrated throttle stages within the bypass.
The type SSV 12 is supplied with a larger Bypass. This is required for larger bypass flows up to 40 bar differential pressure. The choice is done in our works.
The valve range SSV is utilized for fluids with a viscosity ≤ 150 cSt without solids, e.g.:

- in boiler feed water and cooling water plants
- in Petrochemical and Chemical Industry and refrigeration
- in potable water supply and backwater disposal
- Offshore
- in snow production
- in steel production
- for fire fighting systems.

The utilization in nuclear power plants emphasizes the reliability of these fittings (certified to KTA 1401).

SSV
Special Compensating Bypass Check Valve

SSV 10-12

The Compensating Bypass Check Valves of the range SSV 10 can be utilized for Δp up to 220 bar, the type SSV 11 for Δp up to 250 bar and the SSV 12 for Δp up to 40 bar with temperature ranges from –250 °C up to +400 °C. The valves are manufactured in the sizes DN 25 to DN 500 and the range of nominal pressure is PN 10 up to PN 400 (ANSI 150 - ANSI 2500). The bypass flow can be up to 50% of the main flow, recommended is up to 35%.
The valve operates without additional auxiliary energy.
For the protection of fluid pumps with delivery heads of above 2200 m we recommend the range SMA 63/64 (see prospect) with „ON-OFF-regulation“ of the bypass.

Mode of Operation

The Compensating Bypass Check Valve is flow controlled, that means the non-return cone (3) is kept in its operating position by main flow only. The valve is designed in such a way, that the cone reaches its utmost upper position at denominated main flow.
The non-return cone activates the Rotary Slide Valve (13) in the bypass by means of a lever (14). If the cone is positioned on the cone seat, the Rotary Slide Valve is completely open. It closes correspon-ding to the rising of the cone by delivery in main direction. The valve just allows such an amount of bypass flow, as it is necessary for supplement of the required minimum flow of the pump.
As soon as the main flow exceeds the minimum pump flow, the bypass closes. On the other hand the bypass opens again, when the main flow falls short of the bypass flow.

Installation

Valves SSV should preferably be connected directly to the pump discharge branch, and must be mounted vertically with flow entry from below. Limited possibilities for horizontal installation exist, but must be confirmed by the manufacturer.
The bypass flow is piped back to the suction tank.

All bypass valve components are easily serviced. To facilitate serving of the bypass valve, we recommend a removable flanged pipe approx. 1m long to be fitted to the bypass branch. We also recommend installing a pressure relieve valve and a stop valve. The stop valve must be of a type which can be locked in the OPEN position.
Illustration 1 shows a typical arrangement and flow scheme of our Compensating Bypass Check Valve. The hand-operated bypass feature is optional.
In order to avoid vibrations in the valve and the pipes we recommend continuing the connecting line at the outlet (DN2) and Bypass branch (DN3) for approx. 2-3 m in the chosen nominal size. A pipe bend directly at the bypass branch is not admissible.

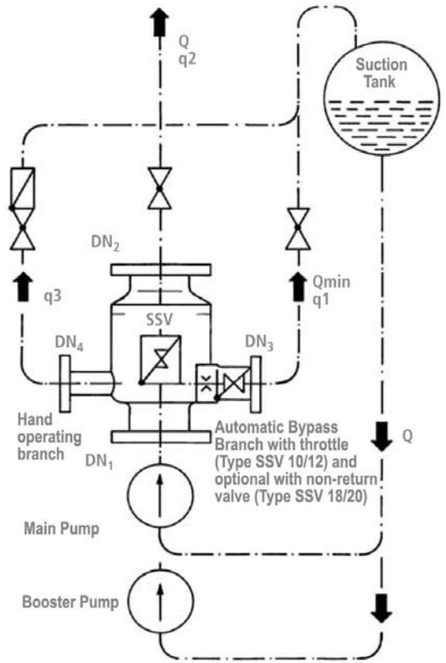

Illustration 1:
Bypass Return with additional hand operated branch (optional).

SSV
Special Compensating Bypass Check Valve

SSV 10-12

Design

The construction is according to specification AD 2000 and particularly to EN 13445. As per Pressure Equipment Directive 97/23 EG the products are provided with the CE marking and the Declaration of Conformity. Certified according to the Module H1 (Pressure Equipment Directive 97/23 EG) all dangerous material classes of category 1 to 4 are covered. Suitable nominal size and nominal pressure are to be chosen according to the pump pressure branch. However, it must be observed, that the admissible flow velocity of 10 m/s may not be exceeded (guarantee). Compensating Bypass Check Valves in larger sizes, for higher pressures and in special designs, which are not listed here, can also be supplied (on request).
If the bypass flow has been indicated too low, it may result in vibrations within the plant, a hammering Compensating Bypass Check Valve resp. a damage of the Valve and the pump (see “inquiry specification“).

Construction

The Valve SSV comprises a radial split body with non-return cone (3), and a separate bypass device in the bypass branch.
All sliding parts are machined from proven stainless steels suitably matched to each other. Parts subjects to wear such as the check valve seat are stellite-faced. The coil springs are also made of stainless steel. In the standard version the casing is of forged steel P250GH (1.0460). In addition high-quality steels of various qualities can be supplied.

In the Bypass the minimum flow is passed off automatically by the Bypass valve head (12).

The pressure reduction from pump pressure to the counter pressure in the bypass line takes place via the Bypass Valve Head (12) and the throttle (15), for higher pressure with multistage throttles.

The hand operating branch with multiport-throttle is fitted at the casing below the cone seat and serves to pass off the minimum flow via a hand-operated valve combination. We recommend the branch for protection of the internal bypass parts at extreme operating conditions, e.g. at high differential pressures and frequent operation in the range of bypass flow as well as for filling and start-up of the plant.

Start-Up-Trim (SUT) substitutes the Bypass valve head during cleaning and start-up of plants and therefore spares the sophisticated regulating parts (optional, permanently open Bypass outlet). Also usable instead of the Hand operating branch

Warm-up branch, pressure gauge branch, draining branch etc. can be provided, if required.
Flange designs to DIN, ANSI, BS, ISO and all related standards are possible.

Furthermore we supply:

- Compensating Bypass Check Valves with control disc and bearing plate in the bypass for high bypass flows at low pump pressure
- Autonomous Minimum Flow System Type SMA 63/64 from DN 65 up-wards at pump pressures from PN 250 - 400 bar.
- Multiport throttles for pressure- and flow reduction of high-pressure media from DN 15 upwards and pressures from PN 10 to PN 640 bar.

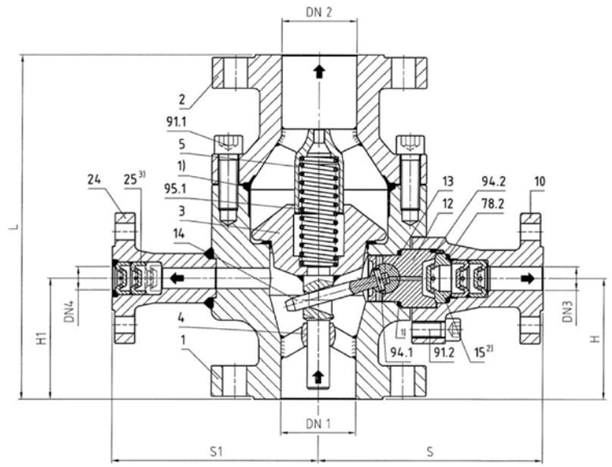

Standard body material 1.0460 (P250GH)

look at info overview

PN 10-PN 400
ANSI 150-2500

up to
Δp 250 bar

SSV 10/12 with throttles in the bypass and hand-operated branch (optional)

Parts List SSV 10/12

Lower body	Part-No.	1
Upper body	Part-No.	2
Cone	Part-No.	3
Cone guide	Part-No.	4
Cone guide	Part-No.	5
Bypass branch	Part-No.	10
Valve head casing	Part-No.	12
Rotary slide valve	Part-No.	13
Operating lever	Part-No.	14
Throttle	Part-No.	15
Hand-op. branch	Part-No.	24
Multi-port throttle	Part-No.	25
O-Ring	Part-No.	78.1
O-Ring	Part-No.	78.2
Socket screw	Part-No.	91.1
Socket screw	Part-No.	91.2
Dowel pin	Part-No.	94.1
Dowel pin	Part-No.	94.2
Coil spring	Part-No.	95.1
		(95.2)
Coil spring	Part-No.	95.3

Spare/Wear Parts SSV 10/12

Bypass Valve Head, complete	Part-No.	60, consisting of:
Casing	Part-No.	12
Rotary slide valve	Part-No.	13
Operating lever	Part-No.	14
Dowel pin	Part-No.	94.1
Dowel pin	Part-No.	94.2
Throttle in the Bypass Branch, consisting of:		
Throttle	Part-No.	15
O-Ring	Part-No.	78.2
Single Spare Parts		
O-Ring	Part-No.	78.1
Coil spring	Part-No.	95.1
		(95.2)

Materials according to operating conditions and valid standards.

SSV
Special Compensating Bypass Check Valve

Dimensions and Weights of Valve Range SSV 10 - DIN

Nominal size		CV											Valve	1)
DN1 mm	PN bar	1-stage [USG/min]	2-stage [USG/min]	3-stage [USG/min]	DN2 mm	DN3 mm	DN4 mm	L mm	H mm	S mm	H1 mm	S1 mm	Weight kg	G1 kg
32	10-40	2.48			32	15 25	25	240	93	165 165	93	165	18 19	2
	63	2.48	1.81			15 25								3
	100	2.48	1.81	1.44		15 25								3
	160					15 25								3.5
	250					15 25								4.5
40	10-40	2.48			40	15 25 32	25	220	78	170 170 180	78	170	19 20 22	2
	63	2.48	1.81			15 25 32		270	100	190 190 200	100	190	30 31 33	3
	100	2.48	1.81	1.44		15 25 32		270	100	190 190 200	100	190	30 31 33	3
	160	2.25	1.71	1.40		15 25 32		270	100	190 190 200	100	190	30 31 33	3.5
	250	2.25	1.71	1.40		15 25 32		300	115	195 195 200	115	195	41 42 44	4.5
50	10-40	3.21			50	15 25 32	25	250	90	180 180 200	90	180	27 28 30	2
	63	3.21	2.03			15 25 32		250	105	200 200	105	200	36 37 39	3
	100	3.21	2.03	1.55		15 25 32		290	105	200 200	105	200	43 44 46	3
	160	2.93	1.96	1.51		15 25 32		290	105	200 200	105	200	43 44 46	3.5
	250	2.93	1.96	1.51		15 25 32		330	125	205 205	125	205	50 51 51	4.5
65	10-40	4.42			65	25 40 50	25	280	105	200 200 210	105	200	41 42 44	2
	63	4.42	2.99			25 40 50		320	120	220 225 235	120	220	54 55 57	3
	100	4.42	2.99	2.33		25 40 50		340	125	220 225 235	125	220	66 67 69	3
	160	3.67	2.73	2.21		25 40 50		340	125	220 225 235	125	220	66 67 69	3.5
	250	3.67	2.73	2.21		25 40 50		370	140	240 240 250	140	240	81 82 85	4.5

Dimensions and Weights of Valve Range SSV 10 - DIN

Nominal size		CV											Valve	1)
DN1 mm	PN bar	1-stage [USG/min]	2-stage [USG/min]	3-stage [USG/min]	DN2 mm	DN3 mm	DN4 mm	L mm	H mm	S mm	H1 mm	S1 mm	Weight kg	G1 kg
80	10-40	7.38			80	25 40 50	25	310	120	220 220 240	120	220	45 46 49	3
	63	7.38	4.59			25 40 50		350	130	230 230 250	130	230	59 60 61	5
	100	7.38	4.59	3.50		25 40 50		370	130	240 240 260	130	240	72 73 77	5
	160	5.57	4.04	3.23		25 40 50		370	130	240 240 260	130	240	72 73 74	6
	250	5.57	4.04	3.23		25 40 50		400	150	250 250 270	150	250	102 103 107	8
100	10-40	11.00			100	40 50 65	380	380	145	280 280 300	145	280	75 76 79	3
	63	11.00	6.85			40 50 65		390	145	280 280 300	145	280	96 97 100	6
	100	11.00	6.85	5.22		40 50 65		430	155	300 300 320	155	300	116 117 121	6
	160	8.34	6.04	4.83		40 50 65		430	155	300 300 320	155	300	116 117 121	7
	250	8.34	6.04	4.83		40 50 65		500	180	320 320 340	180	320	183 185 190	9
125	10-40	17.71			125	40 50 65	40	440	165	360 360 380	165	360	192 118 123	4
	63	17.71	12.01			40 50 65		460	165	360 360 380	165	360	158 160 165	7
	100	17.71	12.01	9.36		40 50 65		500	170	360 360 380	170	360	192 194 200	9
	160	12.68	10.02	8.32		40 50 65		500	170	360 360 380	170	360	192 194 200	10
	250	12.68	10.02	8.32		40 50 65		570	190	380 380 400	190	380	264 267 274	12
150	10-40	22.78			150	50 65 80	50	500	190	380 390 410	190	380	179 181 186	7
	63	22.78	16.12			50 65 80		520	190	400 400 420	190	400	229 231 236	10
	100	22.78	16.12	12.75		50 65 80		580	190	400 400 420	190	400	261 264 270	13
	160	18.73	14.47	11.88		50 65 80		580	190	400 400 420	190	400	288 291 297	15
	250	18.73	13.49	11.32		50 65 80		630	220	420 420 440	220	420	378 381 389	19

SSV 10

look at info overview

PN 10-PN 400

up to Δp 220 bar

SSV
Special Compensating Bypass Check Valve

Dimensions and Weights of Valve Range SSV 10 - DIN

Nominal size		CV											Valve	1)
DN1 mm	PN bar	1-stage [USG/min]	2-stage [USG/min]	3-stage [USG/min]	DN2 mm	DN3 mm	DN4 mm	L mm	H mm	S mm	H1 mm	S1 mm	Weight kg	G1 kg
200	10-40	55.42			200	65 80 100	65	630	240	460 470 490	240	460	360 364 370	10
	63	55.45	30.47			65 80 100		650	240	480 480 500	240	480	401 403 409	14
	100	55.45	30.47	22.51		65 80 100		680	240	500 500 520	240	500	443 446 454	17
	160	31.78	23.96	19.47		65 80 100		720	240	520 520 540	240	520	456 459 467	20
	250	21.47	18.50	16.18		65 80 100		830	265	590 590 610	265	590	700 704 714	27
250	10-40	67.44			250	80 100 125	80	730	265	520 520 540	265	520	658 661 667	17
	63	67.44	45.06			80 100 125		760	265	550 550 570	265	550	696 699 705	22
	100	67.44	45.06	34.86		80 100 125		840	280	590 590 610	280	590	784 788 796	23
	160	39.82	33.27	28.47		80 100 125		880	280	590 590 610	280	590	810 814 822	29
	250	37.65	31.93	27.62		80 100 125		1050	340	700 700 720	340	700	1234 1239 1249	59
300	10-40	100.27			300	100 125 150	100	860	320	580 580 600	320	580	823 826 832	20
	63	100.27	68.81			100 125 150		900	320	640 640 660	320	640	881 884 890	28
	100	100.27	68.81	53.37		100 125 150		1050	330	650 650 670	330	650	1113 1118 1126	29
	160	50.79	44.56	39.57		100 125 150		1050	330	650 650 670	330	650	1113 1118 1126	38
	250	50.79	44.56	39.57		100 125 150		1200	380	740 740 760	380	740	2043 2051 2062	75

1) Weight of hand-operating branch

Other pipe sizes, pressure ranges and special designs are deliverable on request.
With reservation to changes of dimensions and weights.

SSV 10

look at info overview

PN 10-PN 400

up to
Δp 220 bar

Dimensions and Weights of Valve Range SSV 10 - ANSI

Nominal size		CV											Valve	1)
DN1 inch	PN lbs	1-stage [USG/min]	2-stage [USG/min]	3-stage [USG/min]	DN2 inch	DN3 inch	DN4 inch	L mm	H mm	S mm	H1 mm	S1 mm	Weight kg	G1 kg
1.25″	150	2.48			1.25″	0.5″ 1″	1″	240	93	165 165	96	165	18 19	2
	300	2.48	1.81			0.5″ 1″		280	103	170 170	103	170	26 27	3
	600	2.48	1.81	1.44		0.5″ 1″							29	3
	900					0.5″ 1″							37	3.5
	1500					0.5″ 1″							40	4.5
1.5″	150	2.48			1.5″	0.5″ 1″ 1.25″	1″	220	78	170 170 180	78	170	19 19 20	2
	300	2.48	1.81			0.5″ 1″ 1.25″		270	100	170 170 180	100	170	27 27 28	3
	600	2.48	1.81	1.44		0.5″ 1″ 1.25″		270	100	190 190 200	100	190	28 29 31	3
	900	2.25	1.71	1.40		0.5″ 1″ 1.25″		320	125	200 200 210	125	200	36 37 39	3.5
	1500	2.25	1.71	1.40		0.5″ 1″ 1.25″		320	125	200 200 210	125	200	39 40 42	4.5
2″	150	3.21			2″	0.5″ 1″ 1.25″	1″	250	90	180 180 190	90	180	27 28 29	2
	300	3.21	2.03			0.5″ 1″ 1.25″		270	100	180 180 190	100	180	32 33 34	3
	600	3.21	2.03	1.55		0.5″ 1″ 1.25″		290	105	200 200 210	105	200	39 40 42	3
	900	2.93	1.96	1.51		0.5″ 1″ 1.25″		325	125	210 210 220	125	210	52 53 55	3.5
	1500	2.93	1.96	1.51		0.5″ 1″ 1.25″		350	135	210 210 220	135	210	61 62 64	4.5
2.5″	150	4.42				1″ 1.5″ 2″	1″	280	105	200 200 210	105	200	43 44 45	2
	300	4.42	2.99			1″ 1.5″ 2″		300	115	200 200 210	115	200	51 52 53	3
	600	4.42	2.99	2.33		1″ 1.5″ 2″		340	125	220 225 235	125	220	62 64 65	3
	900	3.67	2.73	2.21		1″ 1.5″ 2″		370	140	230 235 245	140	230	75 77 79	3.5
	1500	3.67	2.73	2.21		1″ 1.5″ 2″		390	150	240 240 250	150	240	91 93 96	4.5

SSV 10

look at info overview

ANSI 150-2500

up to
Δp 220 bar

SSV
Special Compensating Bypass Check Valve

Dimensions and Weights of Valve Range SSV 10 - ANSI

Nominal size		CV											Valve	1)
DN1 inch	PN lbs	1-stage [USG/min]	2-stage [USG/min]	3-stage [USG/min]	DN2 inch	DN3 inch	DN4 inch	L mm	H mm	S mm	H1 mm	S1 mm	Weight kg	G1 kg
3″	150	7.38			3″	1″ 1.5″ 2″	1″	310	120	220 220 240	120	220	45 46 49	3
	300	7.38	4.59			1″ 1.5″ 2″		330	125	230 230 250	125	230	59 60 63	5
	600	7.38	4.59	3.50		1″ 1.5″ 2″		370	130	240 240 260	130	240	79 80 84	5
	900	5.57	4.04	3.23		1″ 1.5″ 2″		390	140	240 240 260	140	240	84 85 89	6
	1500	5.57	4.04	3.23		1″ 1.5″ 2″		430	160	250 255 275	160	250	116 117 121	8
4″	150	11.00			4″	1.5″ 2″ 2.5″	1.5″	380	145	280 280 300	145	280	77 78 82	3
	300	11.00	6.85			1.5″ 2″ 2.5″		390	145	280 280 300	145	280	102 103 107	6
	600	11.00	6.85	5.22		1.5″ 2″ 2.5″		430	155	300 300 320	155	300	127 128 133	6
	900	8.34	6.04	4.83		1.5″ 2″ 2.5″		450	165	300 300 320	165	300	154 155 160	7
	1500	8.34	6.04	4.83		1.5″ 2″ 2.5″		520	190	320 320 340	190	320	194 196 202	9
5″	150	17.71			5″	1.5″ 2″ 2.5″	1.5″	450	165	360 360 380	165	360	119 121 126	4
	300	17.71	12.01			1.5″ 2″ 2.5″		460	165	360 360 380	165	360	158 160 165	7
	600	17.71	12.01	9.36		1.5″ 2″ 2.5″		500	170	360 360 380	170	360	221 223 229	9
	900	12.68	10.02	8.32		1.5″ 2″ 2.5″		530	185	360 370 390	185	360	258 261 268	10
	1500	12.68	10.02	8.32		1.5″ 2″ 2.5″		630	230	390 390 410	230	390	341 344 351	12
6″	150	22.78			6″	2″ 2.5″ 3″	2″	500	190	380 380 400	190	380	178 179 184	7
	300	22.78	16.12			2″ 2.5″ 3″		520	190	400 400 420	190	400	224 227 333	10
	600	22.78	16.12	12.75		2″ 2.5″ 3″		580	190	400 400 420	190	400	273 27282	13
	900	18.73	14.47	11.88		2″ 2.5″ 3″		600	200	410 420 430	200	410	335 337 344	15
	1500	16.73	13.49	11.32		2″ 2.5″ 3″		700	260	420 420 440	260	420	410 413 421	19

Dimensions and Weights of Valve Range SSV 10 - ANSI

Nominal size		CV											Valve	1)
DN1 inch	PN lbs	1-stage [USG/min]	2-stage [USG/min]	3-stage [USG/min]	DN2 inch	DN3 inch	DN4 inch	L mm	H mm	S mm	H1 mm	S1 mm	Weight kg	G1 kg
8″	150	55.42			8″	2.5″ 3″ 4″	2.5″	630	240	460 470 490	240	460	360 362 368	10
	300	55.42	30.47			2.5″ 3″ 4″		650	240	480 480 500	240	480	390 392 398	14
	600	55.42	30.47	22.51		2.5″ 3″ 4″		680	240	500 500 520	240	500	442 445 453	17
	900	31.78	23.96	19.47		2.5″ 3″ 4″		750	250	530 530 550	250	530	592 595 603	20
	1500	21.47	18.50	16.18		2.5″ 3″ 4″		880	295	590 590 610	295	590	727 730 740	27
10″	150	67.44			10″	3″ 4″ 5″	3″	730	265	520 520 540	265	520	646 648 654	17
	300	67.44	45.06			3″ 4″ 5″		750	270	530 530 550	270	530	690 692 698	22
	600	67.44	45.06	34.86		3″ 4″ 5″		840	280	590 590 610	280	590	795 800 808	23
	900	39.82	33.27	28.47		3″ 4″ 5″		900	290	590 590 610	290	590	917 922 930	29
	1500	37.65	31.93	27.62		3″ 4″ 5″		1100	370	700 700 720	370	700	1149 1455 1465	59
12″	150	100.27			12″	4″ 5″ 6″	4″	860	320	590 590 600	320	580	816 818 842	20
	300	100.27	68.81			4″ 5″ 6″		880	320	600 600 620	320	600	879 881 887	28
	600	100.27	68.81	53.37		4″ 5″ 6″		1050	330	650 650 670	330	350	1096 1101 1110	29
	900	50.79	44.56	39.57		4″ 5″ 6″		1050	330	650 650 670	330	650	1294 1299 1308	38
	1500	50.79	44.56	39.57		4″ 5″ 6″		1250	410	740 740 760	410	740	1998 2005 2016	75

1) Weight of hand-operating branch

Other pipe sizes, pressure ranges and special designs are deliverable on request.
With reservation to changes of dimensions and weights.

SSV 10

look at info overview

ANSI 150-2500

up to Δp 220 bar

SSV
Special Compensating Bypass Check Valve

Dimensions and Weights of Valve Range SSV 12 - DIN

Nominal size		CV										Valve	1)
DN1 mm	PN bar	1-stage [USG/min]	2-stage [USG/min]	DN2 mm	DN3 mm	DN4 mm	L mm	H mm	S mm	H1 mm	S1 mm	Weight kg	G1 kg
40	10-40	2.93		40	15 25 40	25	220	78	170 170 180	78	170	19 19 20	2
	63	2.93	1.91		15 25 40								3
	100				15 25 40								
	160				15 25 40								
	250				15 25 40								
50	10-40	3.67		50	25 40 50	25	260	95	200 200 210	95	200	33 35 38	2
	63	3.67	2.67		25 40 50		300	120	220 225 235	120	220	42 44 47	3
	100				25 40 50								
	160				25 40 50								
	250				25 40 50								
65	10-40	5.57		65	25 40 50	25	290	110	220 220 240	110	220	47 48 51	2
	63	5.57	3.96		25 40 50		330	125	230 230 250	125	230	60 61 64	3
	100				25 40 50								
	160				25 40 50								
	250				25 40 50								
80	10-40	8.34	5.92	80	40 50 65	40	330	130	280 280 300	130	280	50 51 54	3
	63	8.34	5.92		40 50 65								
	100	8.34	5.92		40 50 65		400	150	300 300 320	150	300	93 94 98	5
	160	8.34	5.92		40 50 65		400	150	300 300 320	150	300	93 94 98	6
	250				40 50 65								

Dimensions and Weights of Valve Range SSV 12 - DIN

Nominal size		CV										Valve	1)
DN1 mm	PN bar	1-stage [USG/min]	2-stage [USG/min]	DN2 mm	DN3 mm	DN4 mm	L mm	H mm	S mm	H1 mm	S1 mm	Weight kg	G1 kg
100	10-40	17.71		100	40 50 65	40	410	160	350 350 370	160	350	104 105 110	3
	63	17.71	11.77		40 50 65		420	160	350 350 370	160	350	125 126 131	6
	100	17.71	11.77		40 50 65		460	170	350 350 370	170	350	132 134 140	6
	160	17.71	11.77		40 50 65		480	170	350 350 370	170	350	132 134 140	7
	250				40 50 65								
125	10-40	18.73		125	50 65 80	50	470	180	380 390 140	180	380	120 123 129	4
	63	18.73	14.24		50 65 80								
	100				50 65 80								
	160				50 65 80								
	250				50 65 80								
150	10-40	48.16		150	65 80 100	65	520	190	420 430 450	190	420	183 186 193	7
	63	48.16	42.56		65 80 100								
	100	48.16	42.56		65 80 100		620	210	460 460 480	210	480	278 281 290	13
	160	48.16	42.56		65 80 100		620	210	490 490 510	210	490	320 323 331	15
	250				65 80 100								
200	10-40	39.82		200	80 100 125	80	650	240	490 490 510	240	490	366 370 376	1
	63	39.82	32.87		80 100 125		680	270	520 520 540	270	520	409 411 418	14
	100				80 100 125								
	160				80 100 125								
	250				80 100 125								

SSV 12

look at info overview

PN 10-PN 160

up to Δp 40 bar

SSV
Special Compensating Bypass Check Valve

Dimensions and Weights of Valve Range SSV 12 - DIN

Nominal size		CV										Valve	1)
DN1 mm	PN bar	1-stage [USG/min]	2-stage [USG/min]	DN2 mm	DN3 mm	DN4 mm	L mm	H mm	S mm	H1 mm	S1 mm	Weight kg	G1 kg
250	10-40	53.25		250	100 125 150	100	750	270	560 560 580	270	560	662 664 672	17
	63	53.25	32.82		100 125 150								
	100				100 125 150								
	160				100 125 150								
	250				100 125 150								
300	10-40	172.02		300	125 150 200	125	860	320	580 580 600	320	580	830 832 842	20
	63	172.02	80.39		125 150 200								
	100				125 150 200								
	160				125 150 200								
	250				125 150 200								

1) Weight of hand-operating branch

Other pipe sizes, pressure ranges and special designs are deliverable on request.
With reservation to changes of dimensions and weights.

SSV 12

look at info overview

PN 10-PN 400

up to Δp 40 bar

Dimensions and Weights of Valve Range SSV 12 - ANSI

Nominal size		CV										Valve	1)
DN1 inch	PN lbs	1-stage [USG/min]	2-stage [USG/min]	DN2 inch	DN3 inch	DN4 inch	L mm	H mm	S mm	H1 mm	S1 mm	Weight kg	G1 kg
1.5″	150	2.93		1.5″	0.5″ 1″ 1.5″	1″	220	78	170 170 180	78	170	19 19 20	2
	300	2.93	1.91		0.5″ 1″ 1.5″		270	100	170 170 180	100	170	27 27 28	3
	600				0.5″ 1″ 1.5″								
	900				0.5″ 1″ 1.5″								
	1500				0.5″ 1″ 1.5″								
2″	150	3.67		2″	1″ 1.5″ 2″	1″	250	90	200 200 210	90	200	29 30 32	2
	300	3.67	2.67		1″ 1.5″ 2″		280	105	200 200 210	105	200	35 36 38	3
	600				1″ 1.5″ 2″								
	900				1″ 1.5″ 2″								
	1500				0.5″ 1″ 1.25″								
2.5″	150	5.57		2.5″	1″ 1.5″ 2″	1″	290	110	220 220 230	110	220	47 48 50	2
	300	5.57	3.96		1″ 1.5″ 2″		310	120	230 230 250	120	230	55 56 59	3
	600				1″ 1.5″ 2″								
	900				1″ 1.5″ 2″								
	1500				0.5″ 1″ 1.25″								
3″	150	8.34	5.92	3″	1.5″ 2″ 2.5″	1.5″	330	130	280 280 300	130	280	50 51 55	3
	300	8.34	5.92		1.5″ 2″ 2.5″		350	135	280 280 300	135	280	62 63 67	
	600	8.34	5.92		1.5″ 2″ 2.5″		390	140	300 300 320	140	300	85 86 91	5
	900	8.34	5.92		1.5″ 2″ 2.5″		410	150	300 300 320	150	300	105 106 111	6
	1500				1.5″ 2″ 2.5″								

SSV 12

look at info overview

ANSI 150-900

up to Δp 40 bar

SSV
Special Compensating Bypass Check Valve

Dimensions and Weights of Valve Range SSV 12 - ANSI

Nominal size		CV										Valve	1)
DN1 inch	PN lbs	1-stage [USG/min]	2-stage [USG/min]	DN2 inch	DN3 inch	DN4 inch	L mm	H mm	S mm	H1 mm	S1 mm	Weight kg	G1 kg
	150	17.71			1.5″ 2″ 2.5″		410	160	350 350 370	160	350	104 106 111	3
	300	17.71	11.77		1.5″ 2″ 2.5″		420	160	350 350 370	160	350	108 110 115	6
4″	600	17.71	11.77	14″	1.5″ 2″ 2.5″	1.5″	460	170	360 360 380	170	360	132 134 140	6
	900	17.71	11.77		1.5″ 2″ 2.5″								7
	1500				1.5″ 2″ 2.5″								
	150	18.73			2″ 2.5″ 3″		480	180	370 370 390	180	370	125 127 132	4
	300	18.73	14.24		2″ 2.5″ 3″		500	180	390 390 410	180	390	164 166 171	
5″	600			5″	2″ 2.5″ 3″	2″							
	900				2″ 2.5″ 3″								
	1500				2″ 2.5″ 3″								
	150	48.16			2.5″ 3″ 4″		520	190	420 430 450	190	420	183 185 191	7
	300	48.16	42.56		2.5″ 3″ 4″		540	190	440 440 460	190	440	229 232 238	
6″	600	48.16	42.56	6″	2.5″ 3″ 4″	2.5″	620	210	460 460 480	210	460	287 281 289	13
	900	48.16	42.56		2.5″ 3″ 4″		640	220	500 500 520	220	500	340 343 351	15
	1500				2.5″ 3″ 4″								
	150	39.82			3″ 4″ 5″		650	240	490 490 510	240	490	368 370 376	1
	300	39.82	32.87		3″ 4″ 5″		690	260	500 500 520	260	500	398 400 406	14
8″	600			8″	3″ 4″ 5″	3″							
	900				3″ 4″ 5″								
	1500				3″ 4″ 5″								

Dimensions and Weights of Valve Range SSV 12 - ANSI

Nominal size		CV										Valve	1)
DN1 inch	PN lbs	1-stage [USG/min]	2-stage [USG/min]	DN2 inch	DN3 inch	DN4 inch	L mm	H mm	S mm	H1 mm	S1 mm	Weight kg	G1 kg
	150	53.25			4″ 5″ 6″		750	270	560 560 580	270	560	662 664 670	17
	300	53.25	32.82		4″ 5″ 6″		770	275	580 580 600	275	580	705 707 716	
10″	600			10″	4″ 5″ 6″	4″							
	900				4″ 5″ 6″								
	1500				4″ 5″ 6″								
	150	172.02			5″ 6″ 8″		860	320	580 580 600	320	580	830 832 842	20
	300	172.02	80.39		5″ 6″ 8″		880	320	580 580 600	320	580	896 898 908	
12″	600			12″	5″ 6″ 8″	5″							
	900				5″ 6″ 8″								
	1500				5″ 6″ 8″								

1) Weight of hand-operating branch

Other pipe sizes, pressure ranges and special designs are deliverable on request.
With reservation to changes of dimensions and weights.

SSV 12

look at info overview

ANSI 150-900

up to Δp 40 bar

SSV

SSV 18-20

Special Compensating Bypass
Check Valve

look at info
overview

PN 10-PN 400
ANSI 150-2500

up to
Δp 250 bar

SSV 18-20
(type with integrated non-return valve in the bypass)

Range of Applications

Compared to the series SSV 10-12, the series SSV 18-20 uses an integrated non-return valve in the bypass. It automatically protects centrifugal pumps – especially those handling hot water – from damage which might occur through partial evaporation of the water content during low load operation.

As soon as the pump capacity drops below a predetermined flow rate, the bypass valve opens sufficiently to maintain the pump minimum flow rate. This rate is maintained even if the flow through the main valve to the boiler or process is completely shut off. The pressure will be reduced by integrated throttle stages within the bypass.

The type SSV 20 is supplied with a larger bypass. This is required for larger bypass flows up to 40 bar differential pressure. The choice is done in our works.

The valve range SSV is utilized for fluids with a viscosity ≤ 150 cSt without solids, e.g.:

- in boiler feed water and cooling water plants
- in Petrochemical and Chemical Industry and refrigeration
- in potable water supply and backwater disposal
- Offshore
- in snow production
- in steel production
- for fire fighting systems.

The utilization in nuclear power plants emphasizes the reliability of these fittings (certified to KTA 1401).

SSV
Special Compensating Bypass Check Valve

SSV 18-20

look at info overview

PN 10-PN 400
ANSI 150-2500

up to
Δp 250 bar

The Compensating Bypass Check Valves of the range SSV 18 can be utilized for Δp up to 220 bar, the type SSV 19 for Δp up to 250 bar and the SSV 20 for Δp up to 40 bar with temperature ranges from –250°C up to +400°C. The valves are manufactured in the sizes DN 25 to DN 500 and the range of nominal pressure is PN 10 up to PN 400 (ANSI 150 – ANSI 2500). The bypass flow can be up to 50% of the main flow, recommended is up to 35%.

The valve operates without additional auxiliary energy.

For the protection of fluid pumps with delivery heads of above 2200 m we recommend the range SMA 63/64 (see prospect) with „ON-OFF-regulation“ of the bypass.

Mode of Operation

The Compensating Bypass Check Valve is flow controlled, that means the non-return cone (3) is kept in its operating position by main flow only. The valve is designed in such a way, that the cone reaches its utmost upper position at denominated main flow.

The non-return cone activates the Rotary Slide Valve (13) in the bypass by means of a lever (14). If the cone is positioned on the cone seat, the Rotary Slide Valve is completely open. It closes corresponding to the rising of the cone by delivery in main direction. The valve just allows such an amount of bypass flow, as it is necessary for supplement of the required minimum flow of the pump.

As soon as the main flow exceeds the minimum pump flow, the bypass closes. On the other hand the bypass opens again, when the main flow falls short of the bypass flow.

Installation

Valves SSV should preferably be connected directly to the pump discharge branch, and must be mounted vertically with flow entry from below. Limited possibilities for horizontal installation exist, but must be confirmed by the manufacturer.

The bypass flow is piped back to the suction tank. All bypass valve components are easily serviced. To facilitate serving of the bypass valve, we recommend a removable flanged pipe approx. 1 m long to be fitted to the bypass branch. We also recommend to install a pressure relieve valve and a stop valve. The stop valve must be of a type which can be locked in the OPEN position.

Illustration 1 shows a typical arrangement and flow scheme of our Compensating Bypass Check Valve. The hand-operated bypass feature is optional.

In order to avoid vibrations in the valve and the pipes we recommend continuing the connecting line at the outlet (DN2) and Bypass branch (DN3) for approx. 2-3 m in the chosen nominal size. A pipe bend directly at the bypass branch is not admissible.

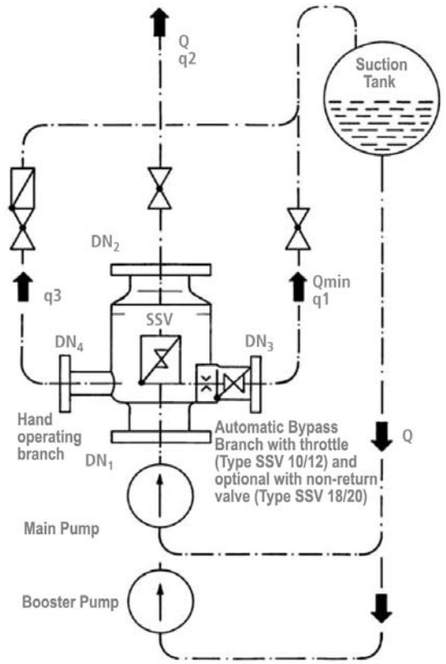

Illustration 1:
Bypass Return with additional hand operated branch (optional).

Design

The construction is according to specification AD 2000 and particularly to EN 13445. As per Pressure Equipment Directive 97/23 EG the products are provided with the CE marking and the Declaration of Conformity. Certified according to the Module H1 (Pressure Equipment Directive 97/23 EG) all dangerous material classes of category 1 to 4 are covered. Suitable nominal size and nominal pressure are to be chosen according to the pump pressure branch. However, it must be observed, that the admissible flow velocity of 10 m/s may not be exceeded (guarantee). Compensating Bypass Check Valves in larger sizes, for higher pressures and in special designs, which are not listed here, can also be supplied (on request).
If the bypass flow has been indicated too low, it may result in vibrations within the plant, a hammering Compensating Bypass Check Valve resp. a damage of the Valve and the pump (see “inquiry specification“).

Construction

The Valve SSV comprises a radial split body with non-return cone (3), and a separate bypass device in the bypass branch.
All sliding parts are machined from proven stainless steels suitably matched to each other. Parts subjects to wear such as the check valve seat are stellite-faced. The coil springs are also made of stainless steel. In the standard version the casing is of forged steel P250GH (1.0460). In addition high-quality steels of various qualities can be supplied.

In the Bypass the minimum flow is passed off automatically by the Bypass valve head (12). The pressure reduction from pump pressure to the counter pressure in the bypass line takes place via the Bypass Valve Head (12), the throttle (16) and the valve (17) for type SSV 18/20.

The hand operating branch with multiport-throttle is fitted at the casing below the cone seat and serves to pass off the minimum flow via a hand-operated valve combination. We recommend the branch for protection of the internal bypass parts at extreme operating conditions, e.g. at high differential pressures and frequent operation in the range of bypass flow as well as for filling and start-up of the plant.

Start-Up-Trim (SUT) substitutes the Bypass valve head during cleaning and start-up of plants and therefore spares the sophisticated regulating parts (optional, permanently open Bypass outlet). Also usable instead of the Hand operating branch

Warm-up branch, pressure gauge branch, draining branch etc. can be provided, if required.
Flange designs to DIN, ANSI, BS, ISO and all related standards are possible.

Furthermore we supply:

- Compensating Bypass Check Valves with control disc and bearing plate in the bypass for high bypass flows at low pump pressure
- Autonomous Minimum Flow System Type SMA 63/64 from DN 65 up-wards at pump pressures from PN 250 – 400 bar.
- Multiport throttles for pressure- and flow reduction of high-pressure media from DN 15 upwards and pressures from PN 10 to PN 640 bar.

SSV
Special Compensating Bypass Check Valve

SSV 18-20

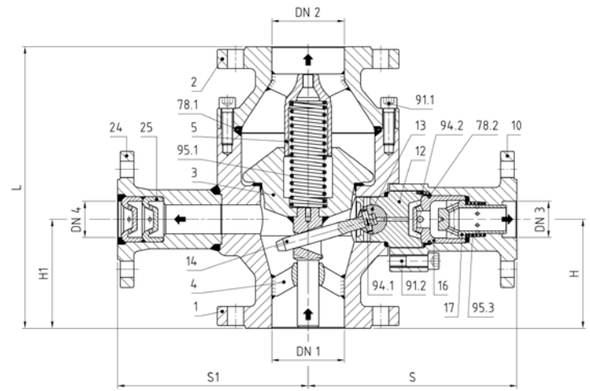

Standard body material 1.0460 (P250GH)


look at info overview

PN 10-PN 400
ANSI 150-2500


up to
Δp 250 bar

SSV 18-20 with non-return valve in the bypass and hand-operated branch (optional)

Parts List SSV 18/20

Lower body	Part-No.	1
Upper body	Part-No.	2
Cone	Part-No.	3
Cone guide	Part-No.	4
Cone guide	Part-No.	5
Bypass branch	Part-No.	10
Valve head casing	Part-No.	12
Rotary slide valve	Part-No.	13
Operating lever	Part-No.	14
Throttle	Part-No.	16
Non-Return Valve	Part-No.	17
Hand-op. branch	Part-No.	24
Multi-port throttle	Part-No.	25
O-Ring	Part-No.	78.1
O-Ring	Part-No.	78.2
Socket screw	Part-No.	91.1
Socket screw	Part-No.	91.2
Coil spring	Part-No.	95.1
		(95.2)
Coil spring	Part-No.	95.3

Spare/Wear Parts SSV 18/20

Bypass Valve Head, complete	Part-No.	60 consisting of:
Casing	Part-No.	12
Rotary slide valve	Part-No.	13
Operating lever	Part-No.	14
Dowel pin	Part-No.	94.1
Dowel pin	Part-No.	94.2
Non-Return Valve in the Bypass Branch, complete, consisting of:		
Throttle	Part-No.	16
Non-Return Valve	Part-No.	17
O-Ring	Part-No.	78.2
Coil spring	Part-No.	95.3
Single Spare Parts		
O-Ring	Part-No.	78.1
O-Ring	Part-No.	78.2
Coil spring	Part-No.	95.1
		(95.2)
Coil spring	Part-No.	95.3

Materials according to operating conditions and valid standards.

SSV
Special Compensating Bypass Check Valve

Dimensions and Weights of Valve Range SSV 18 - DIN

Nominal size											Valve	1)
DN1 mm	PN bar	CV [USG/min]	DN2 mm	DN3 mm	DN4 mm	L mm	H mm	S mm	H1 mm	S1 mm	Weight kg	G1 kg
25	10-40	2.30	25	15 2	25	220	78	180 170	78	170	20 20	2
	63	2.30		15 25		270	100	190 190	100	190	30 31	3
	100	2.30		15 25		270	100	190 190	100	190	30 31	3
	160	2.12		15 25		270	100	190 190	100	190	30 31	3.5
	250	2.12		15 25		300	115	195 195	115	195	41 42	4.5
32	10-40	2.30	32	15 25	25	220	78	180 170	78	170	20 20	2
	63	2.30		15 25		270	100	190 190	100	190	30 31	3
	100	2.30		15 25		270	100	190 190	100	190	30 31	3
	160	2.12		15 25		270	100	190 190	100	190	30 31	3.5
	250	2.12		15 25		300	115	195 195	115	195	41 41	4.5
40	10-40	2.30	40	15 25 32	25	220	78	180 170 180	78	170	20 20 22	2
	63	2.30		15 25 32		270	100	190 190 200	100	190	30 31 33	3
	100	2.30		15 25 32		270	100	190 190 200	100	190	30 31 33	3
	160	2.12		15 25 32		270	100	190 190 200	100	190	30 31 33	3.5
	250	2.12		15 25 32		300	115	195 195 205	115	195	41 42 44	4.5
50	10-40	2.86	50	15 25 32	25	250	90	190 180 190	90	180	28 28 30	2
	63	2.86		15 25 32		280	105	200 200 210	105	200	36 37 39	3
	100	2.86		15 25 32		290	105	200 200 210	105	200	43 44 46	3
	160	2.65		15 25 32		290	105	200 200 210	105	200	43 44 46	3.5
	250	2.65		15 25 32		330	125	205 205 215	125	205	50 51 53	4.5

Dimensions and Weights of Valve Range SSV 18 - DIN

Nominal size											Valve	1)
DN1 mm	PN bar	CV [USG/min]	DN2 mm	DN3 mm	DN4 mm	L mm	H mm	S mm	H1 mm	S1 mm	Weight kg	G1 kg
65	10-40	3.87	65	25 40 50	40	280	105	205 205 215	105	205	41 42 44	2
	63	3.87		25 40 50		320	120	220 225 235	120	225	53 55 58	3
	100	3.87		25 40 50		340	125	220 225 235	125	225	65 67 70	3
	160	3.34		25 40 50		340	125	220 225 235	125	225	65 67 70	3.5
	250	3.34		25 40 50		370	140	240 240 250	140	240	80 82 86	4.5
80	10-40	6.45	80	25 40 50	40	310	120	245 230 250	120	230	48 46 50	3
	63	6.45		25 40 50		350	130	245 230 250	130	230	62 60 64	5
	100	6.45		25 40 50		370	130	250 240 260	130	240	74 73 78	5
	160	5.14		25 40 50		370	130	250 240 260	130	240	74 73 78	6
	250	5.14		25 40 50		400	150	255 250 270	150	250	103 103 108	8
100	10-40	9.67	100	40 50 65	50	380	145	280 280 300	145	280	75 76 80	3
	63	9.67		40 50 65		390	145	280 280 300	145	280	96 97 101	6
	100	9.67		40 50 65		430	155	300 300 320	155	300	116 117 122	6
	160	7.72		40 50 65		430	155	300 300 320	155	300	116 117 122	7
	250	7.72		40 50 65		500	180	320 320 340	180	320	184 185 191	9
125	10-40	15.91	125	50 65 80	50	440	165	360 360 380	165	360	116 118 122	4
	63	15.91		50 65 80		460	165	360 360 380	165	360	158 160 165	7
	100	15.91		50 65 80		500	170	360 360 380	170	360	192 194 200	9
	160	11.96		50 65 80		500	170	360 360 380	170	360	195 197 203	10
	250	11.96		50 65 80		570	190	380 380 400	190	380	265 267 274	12

SSV
18

look at info overview

PN 10-PN 400

up to
Δp 200 bar

SSV

SSV
Special Compensating Bypass Check Valve

Dimensions and Weights of Valve Range SSV 18 - DIN

Nominal size											Valve	1)
DN1 mm	PN bar	CV [USG/min]	DN2 mm	DN3 mm	DN4 mm	L mm	H mm	S mm	H1 mm	S1 mm	Weight kg	G1 kg
150	10-40	23.13	150	60 80 100	65	500	190	390 395 415	190	390	181 184 191	7
	63	23.13		60 80 100		520	190	400 405 425	190	400	231 234 241	10
	100	23.13		60 80 100		580	190	420 420 440	190	420	264 266 274	13
	160	16.05		60 80 100		580	190	420 420 440	190	420	291 293 301	15
	250	16.05		60 80 100		630	220	420 420 440	220	420	381 383 393	19
200	10-40	44.84	200	80 100 125	80	630	240	480 480 500	240	480	364 366 372	10
	63	44.84		80 100 125		650	240	485 485 505	240	485	403 405 411	14
	100	44.84		80 100 125		680	240	510 520 540	240	510	446 451 459	17
	160	20.96		80 100 125		720	240	520 535 555	240	520	459 464 473	20
	250	20.96		80 100 125		830	265	590 590 610	265	590	704 707 717	27
250	10-40	55.05	250	100 125 150	100	730	265	560 560 580	265	560	661 664 672	17
	63	55.05		100 125 150		760	265	550 550 570	265	550	699 702 710	22
	100	55.05		100 125 150		840	280	590 590 610	280	590	788 791 799	23
	160	34.97		100 125 150		880	280	590 590 610	280	590	814 817 826	29
	250	34.97		100 125 150		1050	340	700 700 720	340	700	1239 1243 1253	59
300	10-40	81.85	300	125 150 200	125	860	320	640 640 660	320	640	826 829 837	20
	63	81.85		125 150 200		900	320	640 640 660	320	640	884 887 895	28
	100	81.85		125 150 200		1050	330	680 680 100	330	680	1118 1123 1133	29
	160	42.29		125 150 200		1050	330	680 680 700	330	680	1118 1123 1133	38
	250	42.29		125 150 200		1200	380	740 740 760	380	740	2051 2056 2066	75

1) Weight of hand-operating branch

Other pipe sizes, pressure ranges and special designs are deliverable on request.
With reservation to changes of dimensions and weights.

SSV 18


look at info overview

PN 10-PN 400


up to
Δp 200 bar

Dimensions and Weights of Valve Range SSV 18 - ANSI

Nominal size											Valve	1)
DN1 inch	PN lbs	CV [USG/min]	DN2 inch	DN3 inch	DN4 inch	L mm	H mm	S mm	H1 mm	S1 mm	Weight kg	G1 kg
1″	150	2.30	1″	0.5″ 1″	1″	220	78	180 170	78	170	19 19	2
	300	2.30		0.5″ 1″		270	100	180 170	100	170	27 27	3
	600	2.30		0.5″ 1″		270	100	190 190	100	190	28 29	3
	900	2.12		0.5″ 1″		320	125	200 200	125	200	36 37	3.5
	1500	2.12		0.5″ 1″		320	125	200 200	125	200	39 40	4.5
1.25″	150	2.30	1.25″	0.5″ 1″	1″	220	78	170 170	78	170	19 19	2
	300	2.30		0.5″ 1″		270	100	180 170	100	170	27 27	3
	600	2.30		0.5″ 1″		270	100	190 190	100	190	28 29	3
	900	2.12		0.5″ 1″		320	125	200 200	125	200	36 37	3.5
	1500	2.12		0.5″ 1″		320	125	200 200	125	200	39 40	4.5
1.5″	150	2.30	1.5″	0.5″ 1″ 1.25″	1″	220	78	180 170 180	78	170	19 19 20	2
	300	2.30		0.5″ 1″ 1.25″		270	100	180 170 180	100	170	27 27 28	3
	600	2.30		0.5″ 1″ 1.25″		270	100	190 190 200	100	190	28 29 31	3
	900	2.12		0.5″ 1″ 1.25″		320	125	200 200 210	125	200	36 37 39	3.5
	1500	2.12		0.5″ 1″ 1.25″		320	125	200 200 210	125	200	39 40 42	4.5
2″	150	2.86	2″	0.5″ 1″ 1.25″	1.5″	250	90	190 180 190	90	180	28 28 29	2
	300	2.86		0.5″ 1″ 1.25″		270	100	190 180 190	100	180	33 33 34	3
	600	2.86		0.5″ 1″ 1.25″		290	105	200 200 210	105	200	39 40 42	3
	900	2.65		0.5″ 1″ 1.25″		325	125	210 210 220	125	210	52 53 55	3.5
	1500	2.65		0.5″ 1″ 1.25″		350	135	210 210 220	135	210	61 62 64	4.5

SSV 18


look at info overview

ANSI 150-2500


up to
Δp 200 bar

SSV
Special Compensating Bypass Check Valve

SSV 18


look at info overview


ANSI 150-2500


up to Δp 200 bar

Dimensions and Weights of Valve Range SSV 18 - ANSI

Nominal size											Valve	1)
DN1 inch	PN lbs	CV [USG/min]	DN2 inch	DN3 inch	DN4 inch	L mm	H mm	S mm	H1 mm	S1 mm	Weight kg	G1 kg
2.5″	150	3.87	2.5″	1″ 1.5″ 2″	1.5″	280	105	205 205 215	105	205	43 44 45	2
	300	3.87		1″ 1.5″ 2″		300	115	205 205 215	115	205	51 52 53	3
	600	3.87		1″ 1.5″ 2″		340	125	220 225 235	125	225	62 63 67	3
	900	3.34		1″ 1.5″ 2″		370	140	230 235 245	140	235	75 77 80	3.5
	1500	3.34		1″ 1.5″ 2″		390	150	240 240 250	150	240	91 93 97	4.5
3″	150	6.45	3″	1.5″ 2″ 2.5″	1.5″	310	120	245 230 250	120	230	48 46 50	3
	300	6.45		1.5″ 2″ 2.5″		330	125	245 230 250	125	230	62 60 64	5
	600	6.45		1.5″ 2″ 2.5″		370	130	250 240 260	130	240	81 80 84	5
	900	5.14		1.5″ 2″ 2.5″		390	140	250 245 265	140	245	85 85 89	6
	1500	5.14		1.5″ 2″ 2.5″		430	160	255 250 270	160	250	117 117 121	8
4″	150	9.67	4″	1.5″ 2″ 2.5″	2″	380	145	280 280 300	145	280	77 78 82	3
	300	9.67		1.5″ 2″ 2.5″		390	145	280 280 300	145	280	102 103 107	6
	600	9.67		1.5″ 2″ 2.5″		430	155	300 300 320	155	300	126 128 133	6
	900	7.72		1.5″ 2″ 2.5″		450	165	300 310 320	165	310	152 155 159	7
	1500	7.72		1.5″ 2″ 2.5″		520	190	320 320 340	190	320	192 196 202	9
5″	150	15.91	5″	2″ 2.5″ 3″	2″	450	165	360 360 380	165	360	121 123 128	4
	300	15.91		2″ 2.5″ 3″		480	165	370 360 380	165	370	160 161 166	7
	600	15.91		2″ 2.5″ 3″		500	170	360 360 380	170	360	223 225 231	9
	900	11.96		2″ 2.5″ 3″		530	185	370 375 395	185	370	261 264 271	10
	1500	11.96		2″ 2.5″ 3″		630	230	390 390 410	230	390	344 346 353	12

Dimensions and Weights of Valve Range SSV 18 - ANSI

Nominal size											Valve	1)
DN1 inch	PN lbs	CV [USG/min]	DN2 inch	DN3 inch	DN4 inch	L mm	H mm	S mm	H1 mm	S1 mm	Weight kg	G1 kg
6″	150	23.13	6″	2.5″ 3″ 4″	2.5″	500	190	390 395 415	190	390	179 181 187	7
	300	23.13		2.5″ 3″ 4″		520	190	390 395 415	190	390	227 230 236	10
	600	23.13		2.5″ 3″ 4″		580	190	420 420 440	190	420	275 277 284	13
	900	16.05		2.5″ 3″ 4″		600	200	420 420 440	200	420	337 339 346	15
	1500	16.05		2.5″ 3″ 4″		700	260	420 420 440	260	420	413 416 424	19
8″	150	44.84	8″	3″ 4″ 5″	3″	630	240	480 480 500	240	480	362 364 370	10
	300	44.84		3″ 4″ 5″		650	240	480 480 500	240	480	392 394 400	14
	600	44.84		3″ 4″ 5″		680	240	510 520 540	240	510	445 450 458	17
	900	20.96		3″ 4″ 5″		750	250	520 535 555	250	520	595 601 609	20
	1500	20.96		3″ 4″ 5″		880	295	590 590 610	295	590	730 733 741	27
10″	150	55.05	10″	4″ 5″ 6″	4″	730	265	560 560 580	265	560	648 650 656	17
	300	55.05		4″ 5″ 6″		750	270	560 560 580	270	560	692 694 700	22
	600	55.05		4″ 5″ 6″		840	280	590 590 610	280	590	800 805 813	23
	900	34.67		4″ 5″ 6″		900	290	590 590 610	290	590	922 927 935	29
	1500	34.67		4″ 5″ 6″		1100	370	700 700 720	370	700	1455 1461 1471	59
12″	150	81.85	12″	5″ 6″ 8″	5″	860	320	635 635 655	320	635	818 820 826	20
	300	81.85		5″ 6″ 8″		880	320	640 640 660	320	640	881 883 889	28
	600	81.85		5″ 6″ 8″		1050	330	680 680 700	330	680	1101 1106 1115	29
	900	42.29		5″ 6″ 8″		1050	330	680 680 700	330	680	1299 1304 1313	38
	1500	42.29		5″ 6″ 8″		1250	410	740 740 760	410	740	2005 2012 2024	75

1) Weight of hand-operating branch

Other pipe sizes, pressure ranges and special designs are deliverable on request.
With reservation to changes of dimensions and weights.

SSV
Special Compensating Bypass Check Valve

Dimensions and Weights of Valve Range SSV 20 - DIN

Nominal size											Valve	1)
DN1 mm	PN bar	CV [USG/min]	DN2 mm	DN3 mm	DN4 mm	L mm	H mm	S mm	H1 mm	S1 mm	Weight kg	G1 kg
40	10-40	2.86	40	15 25 32	25	220	78	180 170 180	78	170	20 20 21	2
	63	2.86		15 25 32		270	100	190 190 200	100	190	30 31 32	3
	100			15 25 35								
	160			15 25 35								
	250			15 25 35								
50	10-40	3.87	50	25 40 50	40	260	95	205 205 215	95	205	33 35 38	2
	63	3.87		25 40 50		300	120	220 225 235	120	225	43 45 48	3
	100	3.87		25 40 50								
	160			25 40 50								
	250			25 40 50								
65	10-40	6.45	65	25 40 50	40	290	110	245 230 250	110	230	51 49 52	2
	63	6.45		25 40 50		330	125	245 230 250	125	230	59 61 64	3
	100			25 40 50								
	160			25 40 50								
	250			25 40 50								
80	10-40	9.67	80	40 50 65	50	330	130	280 280 300	130	280	51 52 56	5
	63	9.67		40 50 65								
	100	9.67		40 50 65		400	150	300 300 320	150	300	93 94 98	6
	160	9.67		40 50 65		400	150	300 300 320	150	300	93 94 98	6
	250			40 50 65								

SSV 20

look at info overview

PN 10-PN 400
ANSI 150-2500

up to
Δp 40 bar

Dimensions and Weights of Valve Range SSV 20 - DIN

Nominal size											Valve	1)
DN1 mm	PN bar	CV [USG/min]	DN2 mm	DN3 mm	DN4 mm	L mm	H mm	S mm	H1 mm	S1 mm	Weight kg	G1 kg
100	10-40	15.91	100	50 65 80	50	410	160	350 350 370	160	350	108 109 113	5
	63	15.91		50 65 80		420	160	350 350 370	160	350	129 130 134	6
	100	15.91		50 65 80		460	170	350 350 370	170	350	136 137 141	6
	160			50 65 80		460	170	350 350 370	170	350	136 137 141	6
	250			50 65 80								
125	10-40	23.13	125	65 80 100	40	470	180	380 385 405	180	380	120 122 128	7
	63	23.13		65 80 100		490	180	390 395 415	180	390	197 200 207	8
	100			65 80 100								
	160			65 80 100								
	250			65 80 100								
150	10-40	46.79	150	80 100 125	80	520	190	440 440 460	190	440	187 188 195	7
	63	46.79		80 100 125		550	200	445 445 465	200	445	240 242 249	10
	100	46.79		80 100 125		620	210	470 480 500	210	470	276 279 287	13
	160	46.79		80 100 125		620	210	480 495 515	210	480	338 343 352	15
	250			80 100 125								
200	10-40	33.33	200	100 125 150	100	650	240	530 530 550	240	530	390 393 402	10
	63	33.33		100 125 150		670	240	520 520 540	240	520	449 451 460	14
	100			100 125 150		720	260	560 560 580	260	560	517 520 532	20
	160			100 125 150		760	260	560 560 580	260	560	540 543 555	20
	250			100 125 150								

SSV 20

look at info overview

PN 10-PN 400
ANSI 150-2500

up to
Δp 40 bar

SSV
Special Compensating Bypass Check Valve

Dimensions and Weights of Valve Range SSV 20 - DIN

Nominal size											Valve	1)
DN1 mm	PN bar	CV [USG/min]	DN2 mm	DN3 mm	DN4 mm	L mm	H mm	S mm	H1 mm	S1 mm	Weight kg	G1 kg
250	10-40	50.56	250	125 150 200	125	750	270	620 620 640	270	620	671 673 683	20
	63	50.56		125 150 200		750	270	620 620 640	270	620	712 715 726	23
	100			125 150 200								
	160			125 150 200								
	250			125 150 200								
300	10-40		300	150 200 250	150							
	63			150 200 250								
	100			150 200 250								
	160			150 200 250								
	250			150 200 250								

SSV 20

look at info overview

PN 10-PN 400
ANSI 150-2500

up to
Δp 40 bar

Dimensions and Weights of Valve Range SSV 20 - ANSI

Nominal size											Valve	1)
DN1 inch	PN lbs	CV [USG/min]	DN2 inch	DN3 inch	DN4 inch	L mm	H mm	S mm	H1 mm	S1 mm	Weight kg	G1 kg
1.5″	150	2.86	1.5″	0.5″ 1″ 1.25″	1″	220	78	180 170 180	78	170	19 19 20	2
	300	2.86		0.5″ 1″ 1.25″		270	100	180 170 180	100	170	27 27 28	3
	600			0.5″ 1″ 1.25″								
	900			0.5″ 1″ 1.25″								
	1500			0.5″ 1″ 1.25″								
2″	150	3.87	2″	1″ 1.5″ 2″	1.5″	250	90	205 205 215	90	250	31 32 34	2
	300	3.87		1″ 1.5″ 2″		280	105	205 205 215	105	205	38 39 41	3
	600	3.87		1″ 1.5″ 2″		310	120	220 225 235	120	225	42 44 47	3
	900			1″ 1.5″ 2″								
	1500			1″ 1.5″ 2″								
2.5″	150	6.45	2.5″	1″ 1.5″ 2″	1.5″	290	110	245 230 250	110	230	53 51 54	2
	300	6.45		1″ 1.5″ 2″		310	120	245 230 250	120	230	58 56 59	3
	600			1″ 1.5″ 2″								
	900			1″ 1.5″ 2″								
	1500			1″ 1.5″ 2″								
3″	150	9.67	3″	1.5″ 2″ 2.5″	2″	330	130	280 280 300	130	280	50 51 55	3
	300	9.67		1.5″ 2″ 2.5″		350	135	280 280 300	135	280	62 63 67	5
	600	9.67		1.5″ 2″ 2.5″		390	140	240 240 260	140	240	85 86 91	5
	900	9.67		1.5″ 2″ 2.5″		410	150	300 310 320	150	310	105 106 111	6
	1500			1.5″ 2″ 2.5″								

SSV 20

look at info overview

ANSI 150-900

up to
Δp 40 bar

SSV
Special Compensating Bypass Check Valve

Dimensions and Weights of Valve Range SSV 20 - ANSI

Nominal size											Valve	1)
DN1 inch	PN lbs	CV [USG/min]	DN2 inch	DN3 inch	DN4 inch	L mm	H mm	S mm	H1 mm	S1 mm	Weight kg	G1 kg
4″	150	15.91	4″	2″ 2.5″ 3″	2″	410	160	350 350 370	160	350	106 107 111	3
	300	15.91		2″ 2.5″ 3″		420	160	360 360 380	160	360	110 111 115	6
	600	15.91		2″ 2.5″ 3″		460	170	360 360 380	170	360	134 135 140	6
	900			2″ 2.5″ 3″								
	1500			2″ 2.5″ 3″								
5″	150	23.13	5″	2.5″ 3″ 4″	2.5″	480	180	380 385 405	180	380	127 129 134	4
	300	23.13		2.5″ 3″ 4″		500	180	380 385 405	180	380	166 168 173	7
	600			2.5″ 3″ 4″								
	900			2.5″ 3″ 4″								
	1500			2.5″ 3″ 4″								
6″	150	46.79	6″	3″ 4″ 5″	3″	520	190	440 440 460	190	440	185 186 193	7
	300	46.79		3″ 4″ 5″		540	190	440 440 460	190	440	232 233 241	10
	600	46.79		3″ 4″ 5″		620	210	470 480 500	210	470	281 284 292	13
	900	46.79		3″ 4″ 5″		640	220	490 505 525	220	490	343 348 357	15
	1500			3″ 4″ 5″								
8″	150	33.33	8″	4″ 5″ 6″	4″	650	240	530 530 550	240	530	387 380 389	10
	300	33.33		4″ 5″ 6″		690	280	530 530	260	530	408 410 419	14
	600			4″ 5″ 6″								
	900			4″ 5″ 6″								
	1500			4″ 5″ 6″								

Dimensions and Weights of Valve Range SSV 20 - ANSI

Nominal size											Valve	1)
DN1 inch	PN lbs	CV [USG/min]	DN2 inch	DN3 inch	DN4 inch	L mm	H mm	S mm	H1 mm	S1 mm	Weight kg	G1 kg
10″	150	50.56	10″	5″ 6″ 8″	5″	750	270	620 620 640	270	620	677 680 691	17
	300	50.56		5″ 6″ 8″		770	275	620 620	275	620	726 729 740	22
	600			5″ 6″ 8″								
	900			5″ 6″ 8″								
	1500			5″ 6″ 8″								
12″	150		12″	6″ 8″ 10″	6″							
	300			6″ 8″ 10″								
	600			6″ 8″ 10″								
	900			6″ 8″ 10″								
	1500			6″ 8″ 10″								

1) Weight of hand-operating branch

Other pipe sizes, pressure ranges and special designs are deliverable on request.
With reservation to changes of dimensions and weights.

SSV 20

look at info overview

ANSI 150-900

up to Δp 40 bar

SSV

SSV 40-49

Special Compensating Bypass
Check Valve

look at info
overview

PN 10-PN 100
ANSI 150-600

up to
Δp 80 bar

SSV 40-49 (with control disc and bearing plate)

Range of applications

The Compensating Bypass Check Valve type SSV 40 to 49 is a pump protection device. Based on the SSV 10 to 20 series it was especially designed for centrifugal pumps with high bypass flow and low pressure load.

Therefore up to 65% of the nominal pump flow can be delivered through the bypass as minimum flow. (with Type SSV 10 to 20 approx. 35% nominal pump flow is recommended). The max. bypass flow values QBy can be gathered from table 1.

The SSV 40 to 49 valves normally are manufactured in the sizes DN 50 to DN 600 (resp. NVS 2” to NVS 24”). Other sizes are deliverable on request. For design reasons the pressure loss ΔpBy at the bypass is limited to approx. 80 bar. Other operating limits and application ranges are equal to the SSV 10 to 20 series.

Mode of Operation

The Compensating Bypass Check Valve with control disc and bearing plate works flow controlled, that means the non-return cone (3) is kept in his operating position by main flow only. The valve is designed in such a way, that the cone reaches its utmost upper position at denominated main flow.

The non-return cone (3) activates the control disc (37) in the bypass by means of the lever (32). If the cone is positioned on the cone seat, the control disc (37) is completely open. It closes corresponding to the rising of the cone by delivery in main direction. The valve just allows such an amount of bypass flow, as it is necessary for supplement of the required minimum flow of the pump. As soon as the main flow exceeds the minimum pump flow, the bypass closes. On the other hand the bypass opens again, when the main flow falls short of the bypass flow.

Nominal sizes					Specific values	
	Valve Body	Bypass-branch	Valve Body	Bypass-branch		
	DIN		ANSI			
Typ	DN mm	DN3 mm	DN inch	DN3 inch	KV [m³/h]	CV [USG/min]
SSV 40	50-80	25-40	2″-3″	1″-1.5″	10.50	12.29
SSV 41	80-125	40-50	3″-5″	1.5″-2″	21.00	24.57
SSV 42	100-150	65-80	4″-6″	2.5″-3″	42.00	49.14
SSV 43	150-250	100-125	6″-10″	4″-5″	80.00	93.60
SSV 44	200-400	125-150	8″-16″	5″-6″	120.00	140.40
SSV 45	250-400	125-150	10″-16″	5″-6″	172.00	201.24
SSV 46	300-500	150-250	12″-18″	6″-10″	240.00	280.80
SSV 47	350-600	200-300	14″-20″	8″-12″	350.00	409.50
SSV 48	350-600	250-350	14″-20″	10″-14″	502.00	587.34
SSV 49	400-600	350-400	16″-20″	14″-16″	780.00	912.60

SSV
Special Compensating Bypass Check Valve

SSV 40-49

look at info overview

PN 10-PN 100
ANSI 150-600

up to
Δp 80 bar

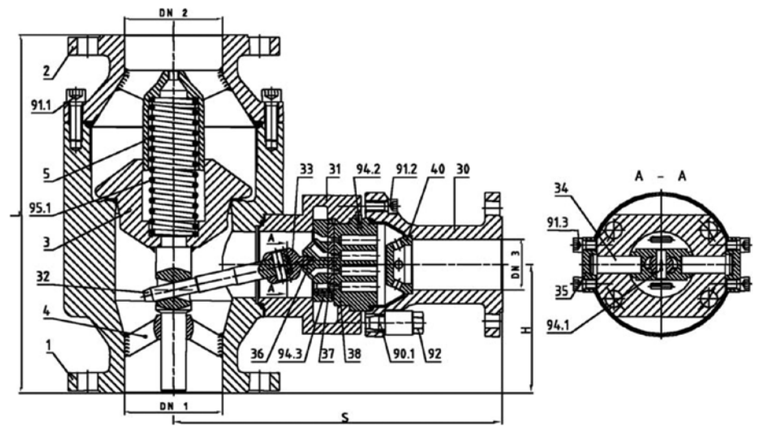

Standard body material 1.0460 (P250GH)

SSV 40-49 with control disc and bearing plate

Parts List

Lower body	Part-No.	1
Upper body	Part-No.	2
Cone complete	Part-No.	3
Cone guide	Part-No.	4
Cone guide	Part-No.	5
Bypass-branch	Part-No.	30
Adapter	Part-No.	31
Lever	Part-No.	32
Toothed segment	Part-No.	33
Bearing pin	Part-No.	34
Pin cover plate	Part-No.	35
Carrier plate	Part-No.	36
Control disc	Part-No.	37
Bearing plate	Part-No.	38
Throttle	Part-No.	40
Stud bolt	Part-No.	90.1
Eye bolt	Part-No.	90.2
Socket screw	Part-No.	91.1
Socket screw	Part-No.	91.2
Cap nut	Part-No.	92
Dowel pin	Part-No.	94.1
Dowel pin	Part-No.	94.2
Dowel pin	Part-No.	94.3
Coil spring	Part-No.	95.1

Spare Parts

Control disc complete, consisting of:

Control disc	Part-No.	37
Bearing plate	Part-No.	38
Dowel pin	Part-No.	94.3

Single Spare Parts

Coil spring	Part-No.	95.1

Materials according to operating conditions and valid standards.

SSV

SSV 70-79

Special Compensating Bypass
Check Valve

look at info
overview

PN 10-PN 100
ANSI 150-600

up to
Δp 80 bar

SSV 70-79 (with control disc complete and non-return valve in bypass)

Range of applications

The Compensating Bypass Check Valve type SSV 70 to 79 is a pump protection device. In addition to the SSV 40-49 series the SSV 70-79 series uses a non-return valve in the bypass. Based on the SSV 10 to 20 series it was especially designed for centrifugal pumps with high bypass flow and low pressure load. Therefore up to 65% of the nominal pump flow can be delivered through the bypass as minimum flow. (with Type SSV 10 to 20 approx. 35% nominal pump flow is recommended). The max. bypass flow values Q_{By} can be gathered from table 1.
The SSV 70 to 79 valves normally are manufactured in the sizes DN 50 to DN 600 (resp. NVS 2” to NVS 24”). Other sizes are deliverable on request. For design reasons the pressure loss Dp_{By} at the bypass is limited to approx. 80 bar. Other operating limits and application ranges are equal to the SSV 10 to 20 series.

Mode of Operation

The Compensating Bypass Check Valve with control disc and bearing plate works flow controlled, that means the non-return cone (3) is kept in his operating position by main flow only. The valve is designed in such a way, that the cone reaches its utmost upper position at denominated main flow.

The non-return cone (3) activates the control disc (37) in the bypass by means of the lever (32). If the cone is positioned on the cone seat, the control disc (37) is completely open. It closes corresponding to the rising of the cone by delivery in main direction. The valve just allows such an amount of bypass flow, as is necessary for supplement of the required minimum flow of the pump. As soon as the main flow exceeds the minimum pump flow, the bypass closes. On the other hand the bypass opens again, when the main flow falls short of the bypass flow.

	Nominal sizes				Specific values	
	Valve Body	Bypass-branch	Valve Body	Bypass-branch		
	DIN		ANSI			
Typ	DN mm	DN3 mm	DN inch	DN3 inch	Kv [m³/h]	Cv [USG/min]
SSV 70	50-80	25-40	2″-3″	1″-1.5″	8,00	9.36
SSV 71	80-125	40-50	3″-5″	1.5″-2″	17,40	20.36
SSV 72	100-150	65-80	4″-6″	2.5″-3″	32,30	37.67
SSV 73	150-250	100-125	6″-10″	4″-5″	60,60	70.90
SSV 74	200-400	125-150	8″-16″	5″-6″	90,00	105.30
SSV 75	250-400	125-150	10″-16″	5″-6″	129,00	150.93
SSV 76	300-500	150-250	12″-18″	6″-10″	180,00	210.60
SSV 77	350-600	200-300	14″-20″	8″-12″	262,50	307.13
SSV 78	350-600	250-350	14″-20″	10″-14″	376,50	440.51
SSV 79	400-600	350-400	16″-20″	14″-16″	585,00	684.45

SSV
Special Compensating Bypass Check Valve

SSV 70-79

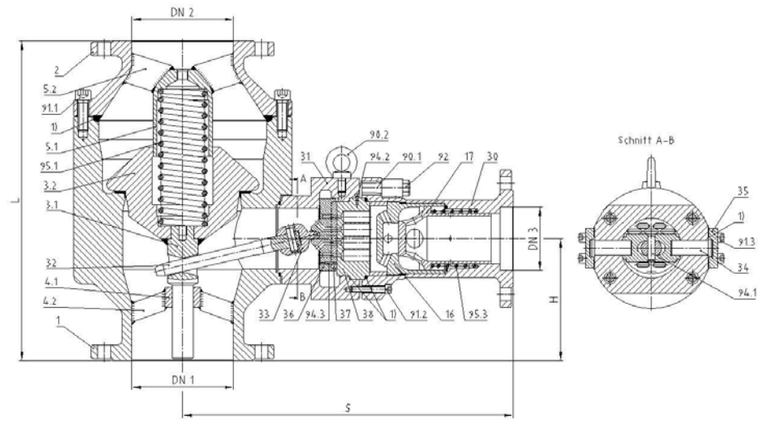

Standard body material 1.0460 (P250GH)

look at info overview

PN 10-PN 100
ANSI 150-600

up to
Δp 80 bar

SSV 70-79 (with control disc complete and non-return valve in bypass)

Parts List

Lower body	Part-No.	1
Upper body	Part-No.	2
Cone complete	Part-No.	3
Cone guide	Part-No.	4
Cone guide	Part-No.	5
Bypass-branch	Part-No.	30
Adapter	Part-No.	31
Lever	Part-No.	32
Toothed segment	Part-No.	33
Bearing pin	Part-No.	34
Pin cover plate	Part-No.	35
Carrier plate	Part-No.	36
Control disc	Part-No.	37
Bearing plate	Part-No.	38
Throttle	Part-No.	40
Socket screw	Part-No.	90.1
Eye bolt	Part-No.	90.2
Socket screw	Part-No.	91.1
Socket screw	Part-No.	91.2
Cap nut	Part-No.	92
Dowel pin	Part-No.	94.1
Dowel pin	Part-No.	94.2
Dowel pin	Part-No.	94.3
Coil spring	Part-No.	95.1

Spare Parts

Control disc complete, consisting of:

Control disc	Part-No.	37
Bearing plate	Part-No.	38
Dowel pin	Part-No.	94.3
Throttle	Part-No.	16
Non-return valve	Part-No.	17

Single Spare Parts

Coil spring	Part-No.	95.1
Coil spring	Part-No.	95.3

Materials according to operating conditions and valid standards.

SMV

SMV
Multifunction Valve

look at info overview

PN 10-PN 400
ANSI 150-2500

up to
Δp 250 bar

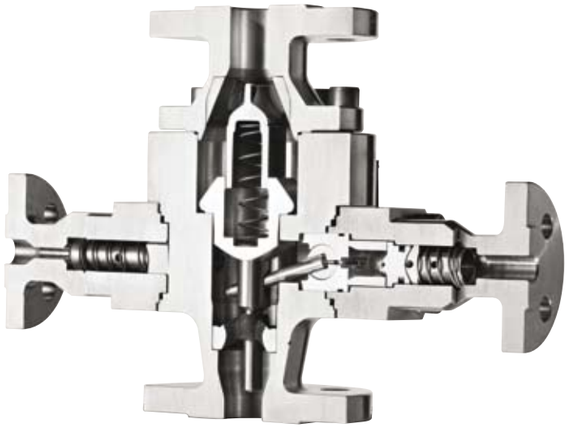

Illustration SMV 18)

SMV 10-20 with degasification branch for liquid gas applications

SMV 10-12 with bypass throttle

SMV 18-20 with bypass non-return valve

Requirements in practice

Observations and case studies from practical applications prove the need for the Schroeder Multifunction Valve.
Operation breakdowns, damages and other problems, caused by dry pump operation have often been observed in fluid gas plants as well as in pump stations of fuel depots. These problems mostly occured during times of start-up and re-starts of pumps.

In case of fluid gases in the boiling point, the transformation of fluid into gas occurs by a minor temperature increase in the stopped pump. This gas volume then presses the fluid out of the pump towards the suction pipe. This results in the pump filling up partly or totally with gas. This can be caused by the temperature influence from outside as well as from the after-heat of the pump immediately after disconnection. Depending on the pump type it will become completely dry or filled up with gas in a way, that the impellers cannot build up delivery pressure when the pump is re-started. Thus the pump operates dry and seconds later considerable damages occur, possibly leading to destruction of the pump and environment.

Function of the Automatic-Degasification

The Automatic-Degasification integrated in the Schroeder Multifunction Valve provides a continuous degasification of the stopped pump and the reserved pump, and secures a constant filling with the delivery fluid.

Mode of Operation

The Schroeder Multifunction Valve SMV is installed near the pressure connection. Due to the elevated position a geodetical high reference point is formed below the non-return cone on the pump pressure side in main stream direction. During the dwell period of the machine, the resulting gas is collected in the region of this high reference point. The Automatic-Degasification of the Multifunction Valve is automatically kept in open position, when the pump is not working. Thus a continuous degasification is provided and the pump is always filled completely with delivery fluid.

In the case of fluid gas pumps in low temperature service the machinery is constantly kept in a cold state and is prepared for a secure start or re-start. Immediately after start-up the pump produces the required diffe rential pressure, and the automatic degasification of the SMV Valve shuts the degasification line tightly.

SMV
Multifunction Valve

When the pump is stopped, the degasification device opens because of the dropping differential pressure, so that developed gas, e.g. by after-heat in the pump system, will be passed off immediately and effectively. The pump remains filled with fluid for the next start or automatic re-start.

Innovation as Challenge

The Multifunction Valve SMV is a product innovation, created with the purpose of eliminating problems, known from day-to-day practice. This valve improves plant security and availability through combining vital functions at competitive prices. The combined pump protection is achieved by assuring the minimum flow regulation and non-return function in the main delivery stream with the Automatic-Degasification.

Application

The main application area is in the process engineering of technical liquefied gases, especially low temperature engineering, fuel depot engineering, and in the shipping of liquefied gases. The Multifunction Valve can be used in all pump plants delivering fluids near the boiling point, two-phase-mixtures, gaseous media and for pumps which are – because of modern sealing systems or similar devices – equipped with gas-injections.
Also, the Multifunction Valve SMV will protect split cage motor pumps (non-seal pumps) and magnetic pumps from dry operation.

Design

The design is according to standard AD 2000 and particulary to EN 13445. As required by Pressure Equipment Directive (PED) 97/23/EG the products are supplied with CE Marking and Declaration of Conformity.
Certified to module H1 all dangerous classes of category 1 to 4 are covered. Otherwise installation, mode of operation and construction are as for Type SSV 10-20.

SMV 10-12 18/20

look at info overview

PN 10-PN 400
ANSI 150-2500

up to
Δp 250 bar

Illustration 1: Delivery of easily boiling fluids

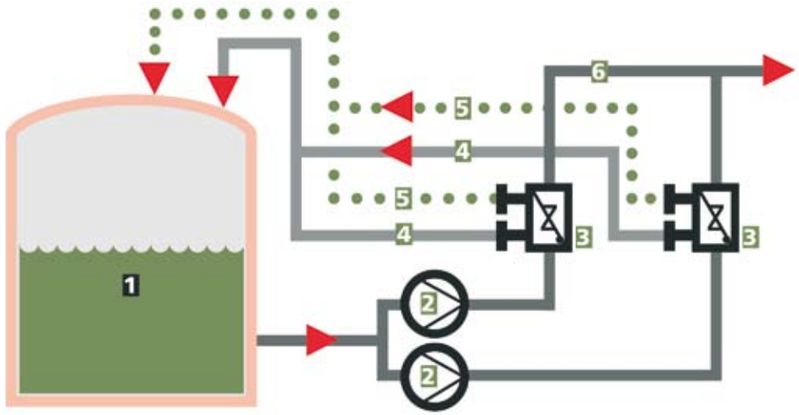

1 Vessel for e. g.: NH3, C2H4, C3H6 etc.
2 Pump 1 and 2
3 Schroeder Multifunction Valve SMV
4 Minimum flow line
5 Degasification line to the vessel
6 Main delivery line to the user

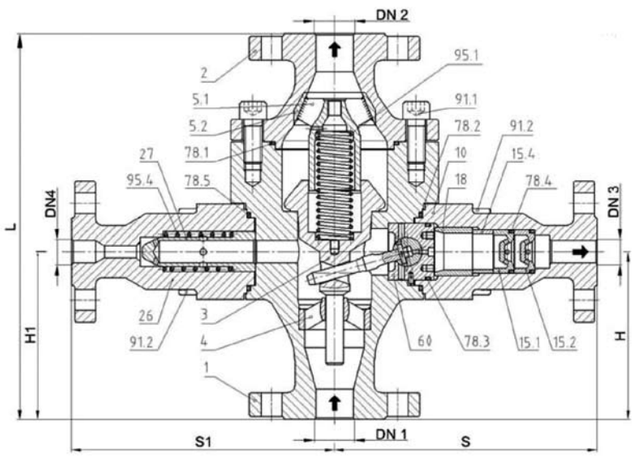

Illustration 2: SMV 10 cross sectional view

SMV 10-12 with throttles in the bypass and automatic degassing branch

Parts List SMV 10-12

Lower body	Part-No.	1
Upper body	Part-No.	2
Cone	Part-No.	3
Cone guide	Part-No.	4
Cone guide	Part-No.	5
Bypass branch	Part-No.	10
Casing	Part-No.	12
Rotary slide valve	Part-No.	13
Operating lever	Part-No.	14
Throttle	Part-No.	15
Degassing branch	Part-No.	26
Degassing valve	Part-No.	27
Bypass Valve Head, complete	Part-No.	60
O-Ring	Part-No.	78.1
O-Ring	Part-No.	78.2
O-Ring	Part-No.	78.3
O-Ring	Part-No.	78.4
O-Ring	Part-No.	78.5
Socket screw	Part-No.	91.1
Socket screw	Part-No.	91.2
Dowel pin	Part-No.	94.1
Dowel pin	Part-No.	94.2
Coil spring	Part-No.	95.1
Coil spring	Part-No.	95.4

Materials according to operating conditions and valid standards.

Spare/Wear Parts SMV 10/12

Bypass Valve Head, complete,	Part-No.	60 consisting of:
Casing	Part-No.	12
Rotary slide valve	Part-No.	13
Operating lever	Part-No.	14
Dowel pin	Part-No.	94.1
Dowel pin	Part-No.	94.2
Throttle in the Bypass Branch, consisting of:		
Throttle	Part-No.	15
O-Ring	Part-No.	78.4
Single Spare Parts		
O-Ring	Part-No.	78.1
O-Ring	Part-No.	78.2
O-Ring	Part-No.	78.3
O-Ring	Part-No.	78.4
O-Ring	Part-No.	78.5
Coil spring	Part-No.	95.1
		(95.2)
Coil spring	Part-No.	95.3
Coil spring	Part-No.	95.4

For main dimensions H, S and L see type SSV 18, H_1 and S_1 on request.

SMV
Multifunction Valve

SMV 18/20

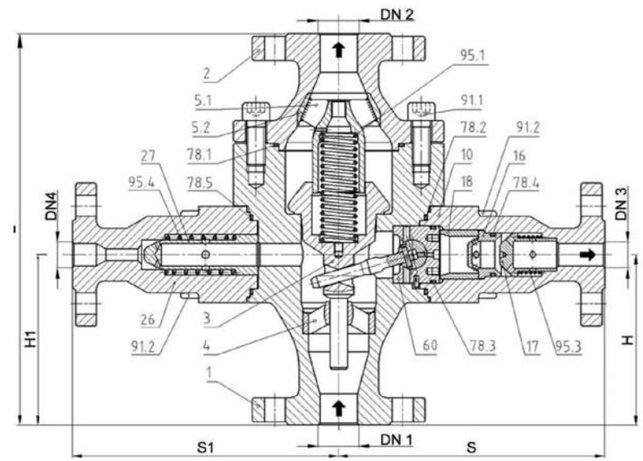

Illustration 3: SMV 18 cross sectional view

SMV 18/20 with non-return valve in the bypass and automatic degassing branch

Parts List SMV 18/20

Lower body	Part-No.	1
Upper body	Part-No.	2
Cone	Part-No.	3
Cone guide	Part-No.	4
Cone guide	Part-No.	5
Bypass branch	Part-No.	10
Casing	Part-No.	12
Rotary slide valve	Part-No.	13
Operating lever	Part-No.	14
Throttle	Part-No.	16
Non-Return Valve	Part-No.	17
Degassing branch	Part-No.	26
Degassing valve	Part-No.	27
Bypass Valve Head, complete	Part-No.	60
O-Ring	Part-No.	78.1
O-Ring	Part-No.	78.2
O-Ring	Part-No.	78.3
O-Ring	Part-No.	78.4
O-Ring	Part-No.	78.5
Socket screw	Part-No.	91.1
Socket screw	Part-No.	91.2
Dowel pin	Part-No.	94.1
Dowel pin	Part-No.	94.2
Coil spring	Part-No.	95.1
Coil spring	Part-No.	95.3
Coil spring	Part-No.	95.4

Materials according to operating conditions and valid standards.

Spare/Wear Parts SMV 18/20

Bypass Valve Head, complete	Part-No.	60 consiting of:
Casing	Part-No.	12
Rotary slide valve	Part-No.	13
Operating lever	Part-No.	14
Dowel pin	Part-No.	94.1
Dowel pin	Part-No.	94.2
Non-Return Valve in the Bypass Branch, complete, consisting of:		
Throttle	Part-No.	16
Non-Return Valve	Part-No.	17
O-Ring	Part-No.	78.2
O-Ring	Part-No.	78.4
Coil spring	Part-No.	95.3
Single Spare Parts		
O-Ring	Part-No.	78.1
O-Ring	Part-No.	78.2
O-Ring	Part-No.	78.3
O-Ring	Part-No.	78.4
O-Ring	Part-No.	78.5
Coil spring	Part-No.	95.1
		(95.2)
Coil spring	Part-No.	95.3
Coil spring	Part-No.	95.4

For main dimensions H, S and L see type SSV 18, H_1 and S_1 on request.

look at info overview

PN 10-PN 400
ANSI 150-2500

up to
Δp 250 bar

SMA

Automatic Minimum Flow System

look at info overview

PN 250-PN 400 ANSI 1500-2500

180 bar < Δp < 400 bar

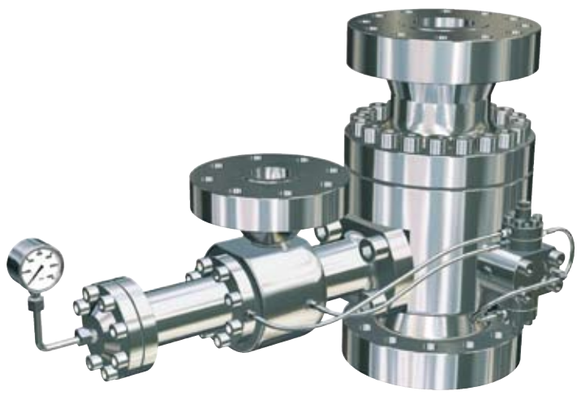

SMA 63 for non-speed controlled pumps
SMA 64 for speed controlled pumps

Applications

The Automatic Minimum Flow System SMA 63/64 is a protection device for pump protection. It automatically protects centrifugal pumps from damages, which might occur during operation under low load conditions because of partial evaporation of the pump content. As soon as the main flow falls short of a predetermined value, the valve opens its bypass, so that the bypass flow is passed off, even if the delivery in main flow direction equals zero.

Through actuation of the bypass via a valve control plunger (15) the bypass can be opened resp. closed completely. This On-Off-Regulation of the Bypass makes it possible to increase the load limit from 200 bar to 400 bar. The prefered duty is in the range of nominal pressure 250 to 400 bar resp. ANSI 2500 lbs.
The Bypass flow can amount up to 35% of the main flow. The valve works without additional auxiliary power.

Maximum flowrate for $Q_{100\%}$ and Q_{By}

DIN		ANSI					
DN1 DN2	DN3	DN1 DN2	DN3	$Q_{100\%}$ at 10 m/s		$Q_{By\ max.}$	
mm	mm	inch	inch	m³/h	l/s	m³/h	l/s
80	32 40	3.0″	1.25″ 1.5″	180	50	45	13
100	40 50	4.0″	1.5″ 2.0″	280	78	70	19
125	50 65	5.0″	2.0″ 2.5″	440	122	70 120	19 133
150	65 80	6.5″	2.5″ 3.0″	630	175	120 180	33 50
200	80 100	8.0″	3.0″ 4.0″	1120	311	180 280	50 78
250	100 125	10.0″	4.0″ 5.0″	1750	486	280 440	78 122

SMA

SMA
Automatic Minimum Flow System

SMA
63/64

Mode of Operation

The main flow lifts the non-return cone (3) up to a defined position. As soon as the main flow equals the value of the pump minimum flow, the cone (3) springs upwards and stops at another predetermined position.

During this procedure the cone actuates both control valves of the pilot unit via the lever (32) and the control plunger (31).

After control valve 2 closes, control valve 1 opens. For the medium the passage to the piston (15) in the by-pass becomes free. The piston forces forward against the passing bypass flow and the bypass closes. (Position „OFF“).

With increasing main flow the cone (3) moves further upwards. It reaches the final position at nominated main flow $Q_{100\%}$.

With decreasing main flow the cone moves downwards and switches the two control valves, as soon as it falls below the required pump minimum flow. The bypass opens (Position „ON“) and the pump minimum flow is passed off via the bypass.

The integrated fine throttle (37) in the pilot unit reduces the velocity of the control flow in „OFF“ direction. This prevents a too fast closing of the bypass and consequently a hammering valve piston (15).

Through the clear positions of the bypass („ON“ resp. „OFF“) combined with the pilot unit a fitting for pump protection has been developed, which combines a very low wear and tear with very high operational security at highest pressure loads.

Construction

The Autonomous Minimum Flow Systems comprise a split body with non-return cone, bypass and the pilot unit.

In the standard option the casing for valve and bypass are of forged steel 1.0460. Cone seat and actuator control surfaces are stellite-faced. The other parts are made of suitable stainless steels.

The minimum flow Q_{By} is passed off via the Bypass. A piston (15) takes over the closing and opening of the bypass. Double sealing of the piston in the ring seat (14) achieves extreme durability of the internal bypass parts. The following pressure reduction of the minimum flow takes place with a multi-port throttle (13) in the bypass.

The pilot unit utilizes the medium and the pump pressure for actuation of the piston (15). Two control valves control the pump pressure in front of resp. behind the piston and consequently the position of the piston ON resp. OFF is regulated. The control valves are actuated depending on the main flow through the cone (3) position via the lever (32). With the integrated fine throttle (37) a cushioned move of the piston (15) is achieved.

With a pressure indicator on the bypass the function of the Minimum Flow System can be supervised.

look at info overview

PN 250-PN 400
ANSI 1500-2500

180 bar < Δp
< 400 bar

As a special design SMA 64 the system can also be utilized for speed controlled pumps.
Special attention has been paid to easy maintenance. So it is not necessary to dismantle the bypass branch resp. the whole fitting for exchange of the wearing parts like piston and ring seat.

The hand-operating branch with multi-port throttle serves for manual control of the minimum flow via a manually actuated valve combination. We recommend the branch for sparing of the internal bypass parts at frequent operation in the range of minimum flow as well as for filling and start-up of the plant. Two positions are possible:

- D1 in the lower part of the casing with junction below the cone;
  · the bypass remains open
- D2 in the upper part of the casing with junction above the cone (larger valve length);
  · the bypass closes at double minimum flow

Warming-up branch, pressure gauge fitting, drainage branch etc. can be provided, if so desired. Flange design acc. to DIN, ANSI, BS, ISO and related standards are possible.

Installation

We recommend installation directly on the pump discharge branch. The flow direction at vertical installation is from bottom to top, when installed vertically.
In order to avoid vibrations in the valve and the pipe lines we recommend to continue the connecting line at the outlet (DN2) and the bypass branch (DN3) for approx. 2-3 m in the chosen nominal bore. A pipe bend directly to the bypass branch should be avoided.

Design

The construction is according to specification AD 2000 and particularly to EN 13445. As per Pressure Equipment Directive 97/23 EG the products are provided with the CE marking and the Declaration of Conformity. Certified according to the Module H1 (Pressure Equipment Directive 97/23 EG) all dangerous material classes of category 1 to 4 are covered.

SMA 63/64

look at info overview

PN 250-PN 400
ANSI 1500-2500

180 bar < Δp < 400 bar

SMA 63

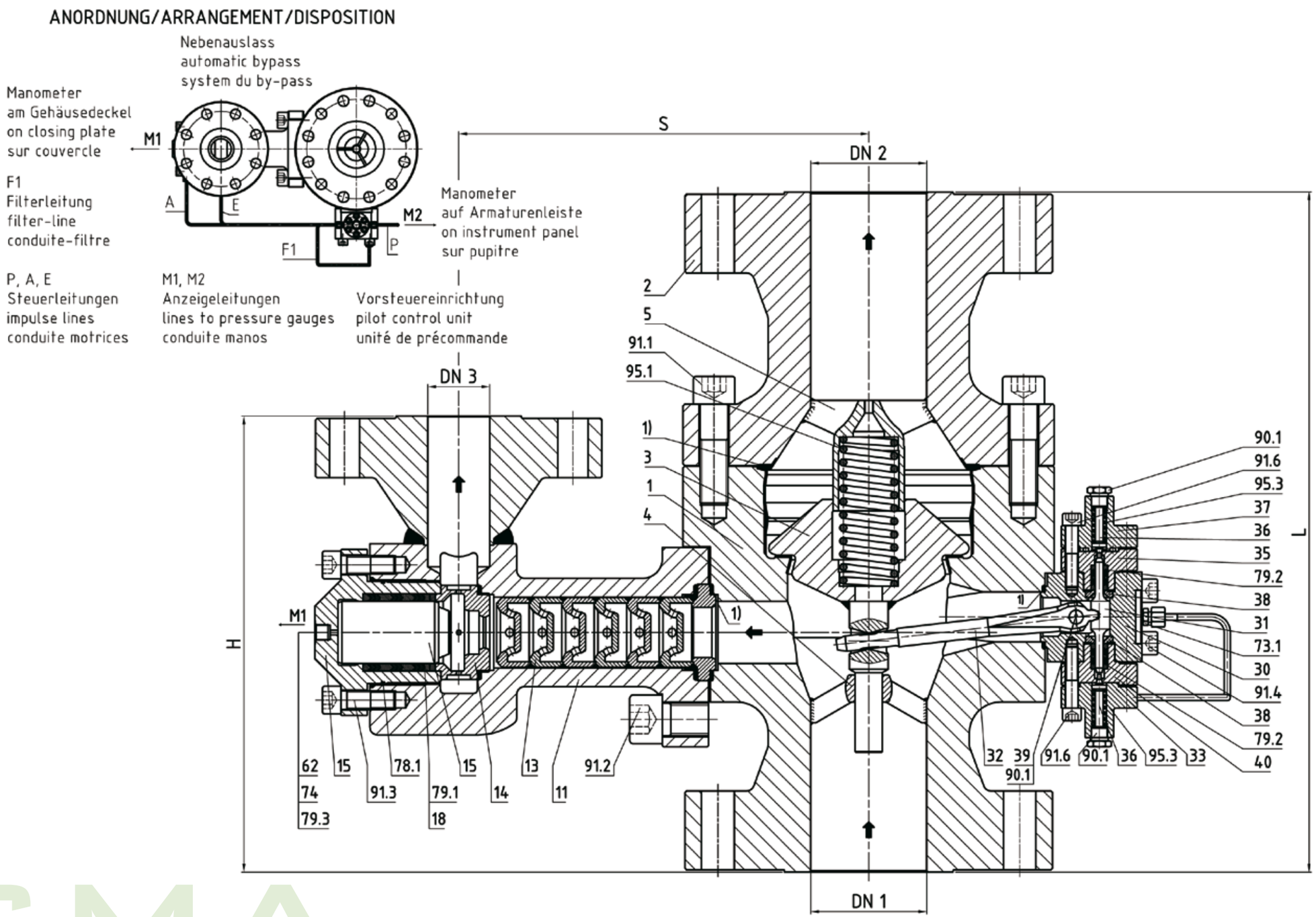


look at info overview


PN 250-PN 400
ANSI 1500-2500

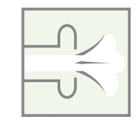
180 bar < Δp
< 400 bar

SMA 64 for speed controlled pumps

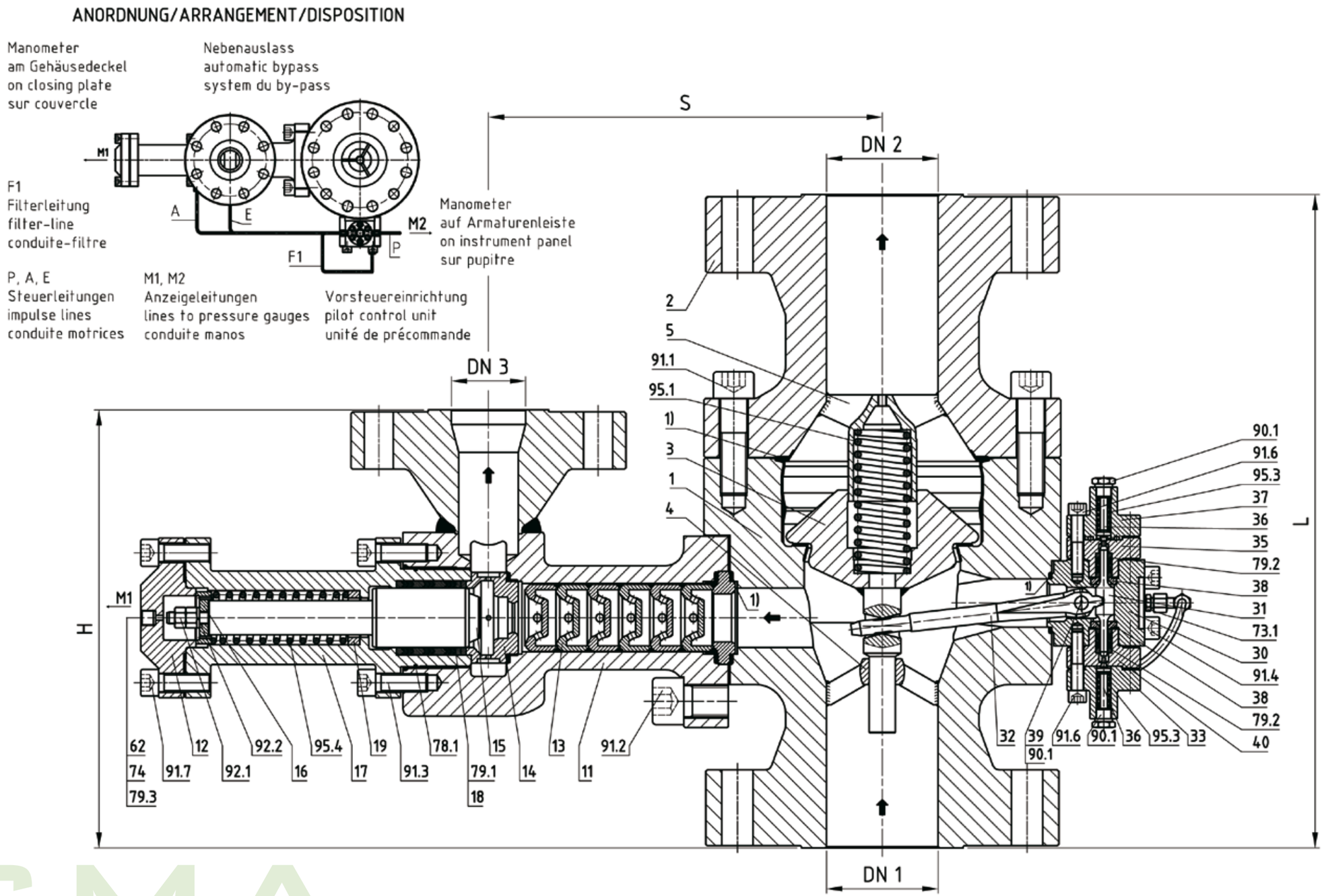

look at info overview

PN 250-PN 400
ANSI 1500-2500

180 bar < Δp < 400 bar

SR/SA

High Pressure Control
Valve

look at info
overview

PN 100-PN 640
ANSI 600-2500

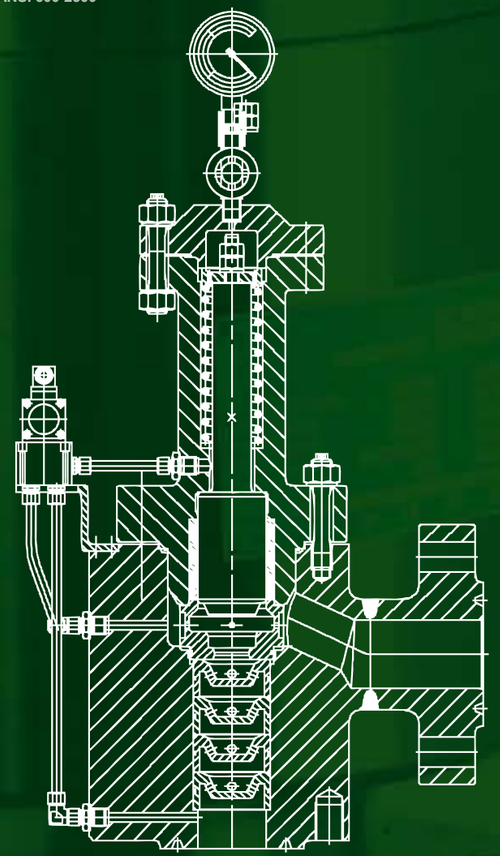

SR/SA
High Pressure Control Valve

Schroeder Flow Control Valve

Range of application

The SR/SA-type is a High-Pressure control valve for liquids. It is designed for simple on-/off-regulation (SA-type) as well as for challenging flow control (SR-type). Mainly it's utilised for the following applications:

Power engineering

- feed water control
- injection systems

Chemical plant engineering

- process control

pump protection

- minimum flow control

In case of pump protection the SR/SA-type is highly associated with modern process control and monitoring systems, as the minimum flow can be precisely adjusted to customers resp. plant requirements. With the check back signal of the positioner (or other available sensors) the valve can be usefully integrated in every process control/monitoring system. In that way the SR/SA-valve enlarges the Schroeder portfolio to control valves and allows pump users to lower their energy and maintenance costs.

Design datas and limits

Referring to the increasing pressure/temperature level especially in the field of electrical power engineering the valves are designed for pressures up to pA = 600 bar / 8700 psi and temperatures of TA = 400 °C / 750 °F. With up to 10 controlled throtteling stages pressure drops around Δp = 600 bar / 8700 psi can be handled troublefree.

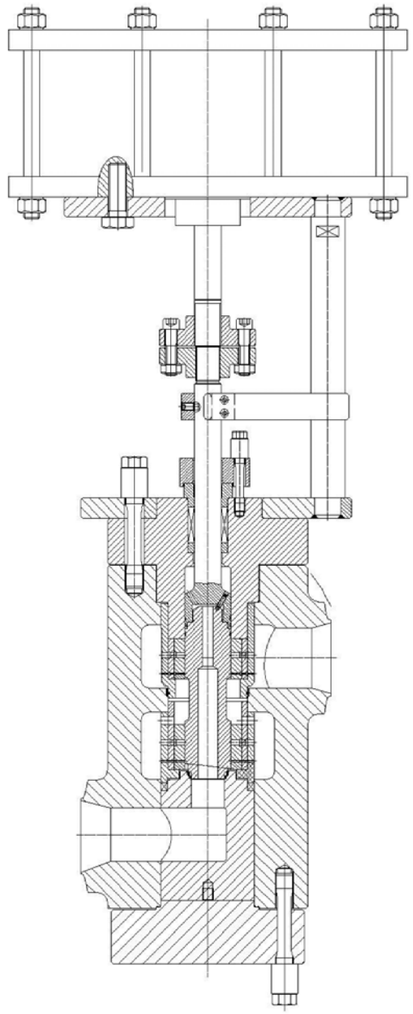

Figure 1: SR-type prepared for mounting of linear thrust actuators

The valve is available with flanges acc. to DIN and ASME or welding ends in a standard range of DN 25 - DN 150 / NPS 1" – NPS 6". Other nominal sizes are possible on request.

The following valve characteristics are available: linear, square, equal percentage and on/off.
Valves can be equipped with all common types of actuators (electrically, pneumatically, hydraulically actuated). Valves with on-/off-regulation can also be delivered self actuated, i.e. without external power supply and controlled by solenoid valve (figure 2).

Technical datas overview	
Max. Design:	600 bar/400 °C
Pressure drop:	Δp max ≤ 600 bar
Nominal sizes:	DN 25 - DN 150 (> other sizes on request)
Connection end:	welding ends or flanges
Characteristics:	on/off, linear, square, equal-%
Actuators:	electric, pneumatic, hydraulic self operated
Body style:	Angle- or Z-type
Body materials:	carbon steel DIN EN 10222-2 stainless steel DIN EN 10222-5 duplex steel DIN EN 10222-5
Inner Parts:	chrome steel
Gaskets: · Body · Inner gaskets	metal to metal ceiling T ≤ 160° O-Ring, PTFE-pressure sleeve T > 160 ° Graphit

Depending on the medium, the valve body is made of ferritic, austenitic or austenitic-ferritic (duplex) steel.

Design

The design is according to specification AD 2000 and particularly to EN 13445. As per Pressure Equipment Directive 97/23 EG the valves are provided with the CE marking and the Declaration of Conformity. Certified according to the Module H1 (Pressure Equipment Directive 97/23 EG) all dangerous material classes of category 1 to 4 are covered.

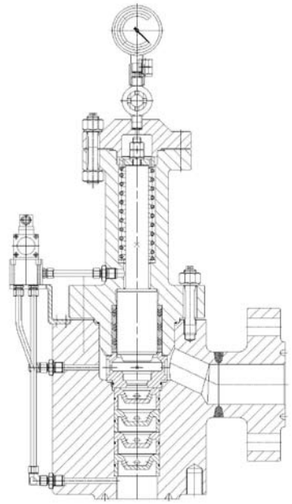

Figure 2: SA-type self actuated, controlled by solenoid valve

SR/SA

look at info overview

PN 100-PN 640
ANSI 600-2500

up to
Δp = 640 bar

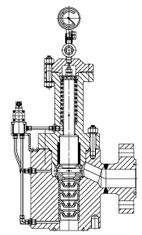

SSD

Multi-Port Throttle

look at info overview

PN 10-PN 640
ANSI 150-2500

up to
Δp 640 bar

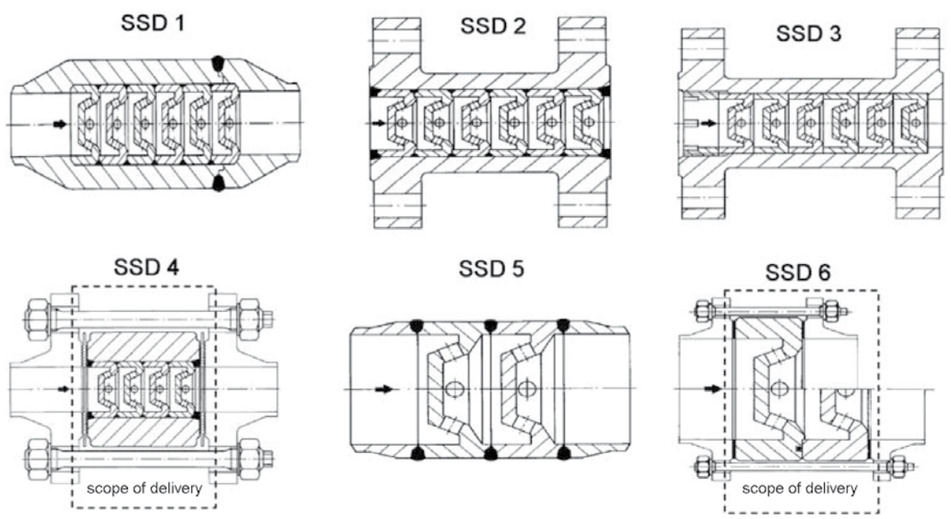

Multi-Port Throttle


look at info overview


PN 10-PN 640
ANSI 150-2500


up to
Δp 640 bar

Multi-Port Throttle for pressure- and flow reduction

Operation range

The Multi-Port Throttles are used to reduce the pressure and flow rate of fluids in pipe systems.

Design

Multi-Port Throttles are available for sizes from DN 20 up to DN 500 and pressure ratings up to PN 640 and ANSI 2500 and for medium temperature up to 300 °C.
The standard material for casing is 1.0460 (P250GH similar to ASTM A105) and for the throttles 1.4581. On request casings can be supplied of different high-grade steel qualities. The design is according to standard AD 2000 and particularly to EN 13445. As required by Pressure Equipment Directive (PED) 97/23/EG the products are supplied with CE Marking and Declaration of Conformity. Certified to module H1 all dangerous classes of category 1 to 4 are covered.

Versions

The pictures above show the available versions of our Multi-Port Throttles. If you have any questions do not hesitate to contact us – it is our pleasure to help you solving your technical problem.

SDV

Back Pressure Device

look at info overview

PN 10-PN 400
ANSI 150-2500

up to
Δp 20 bar

SDV

SDV

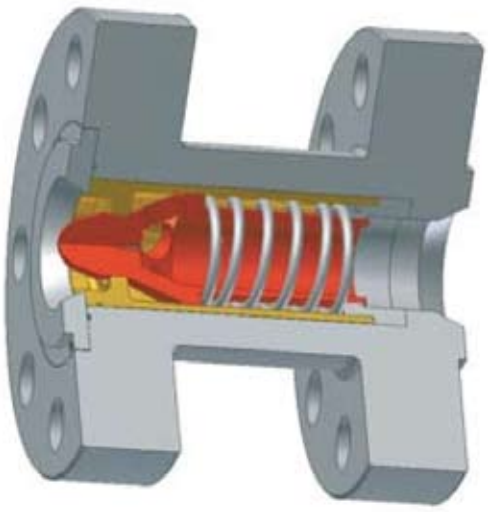

look at info overview

PN 10-PN 400
ANSI 150-2500

up to
Δp 20 bar

SDV – Schroeder Back Pressure Device

Range of application

The SDV is a back pressure device, which keeps the static pressure within the pipeline above a defined minimum value without reference to flow rate. That means, the pressure will not fall below the given minimum value over the whole operating range. Normally back pressure devices are used to avoid cavitation and partial evaporation in the pipeline. Due to the increased pressure level in the protected plant section they prevent a lower deviation from the local vapor pressure. The SDV has an integrated non return-valve function, i.e. the piping is also protected against returning flow.

Mode of operation

The function of the SDV is based on a spring loaded cone. Cone and spring are adjusted in a way, that the force of the static pressure lifts the cone of the seat and does not allow a flow rate before reaching the minimum pressure value. Compared with other pressure devices the Schroeder SDV has a regulating trim, so that the throttling area of the cone seat is attuned to the current flow. With this design feature the tendency of spring loaded shut-off cones to hammer at low flow rate is minimized. So the SDV is suitable for plants with large flow range and frequent part load condition, too.

Technical data

The Schroeder pressure device is manufactured in the nominal sizes DN 25 – DN 200 / NPS 1“ – NPS 8“, for pressure ratings up to PN 400 / ANSI 2500 and a max. operating temperature of 400 °C / 750 °F. Higher pressure ratings are possible on request. The flange-type body is normally made of 1.0460 / ASTM SA105. Referring to medium, several alloyed steels are also deliverable. The regulating trim is made of Cr-steel or aluminium-bronze.

Design

The design is according to specification AD 2000 and particularly to EN 13445. As per Pressure Equipment Directive 97/23 EG the SDV is provided with the CE marking and the Declaration of Conformity. Certified according to the Module H1 (Pressure Equipment Directive 97/23 EG) all dangerous material classes of category 1 to 4 are covered.

SDV